FOA
Electronic Interface for Accelerometer (dual channel)

Revision 1.2

September 2021

Information in this datasheet is believed to be correct but Sercalo reserves the right to change specifications without notice at any time. [38-1199]

This document and its entire content are proprietary and confidential to Sercalo Microtechnology Ltd. Neither this document, nor any part of it, may be disclosed or conveyed to, used by or copied for, any third party without the prior written consent of Sercalo Microtechnology Ltd. All rights reserved. © Sercalo Microtechnology Ltd.

TABLE OF CONTENTS

1 In This Manual....3
2 Quick Start....3
3 Product Layout....4
4 Connector Pin Assignments....6
4.1 Power supply connector (#1)....6
4.2 Optional/jumpers connector (#14)....7
4.3 Manual calibration connector (#13)....7
5 Jumpers Connectors....8
5.1 Power status mode control....8
5.2 Automatic average power control....8
6 Calibration Procedure....8
6.1 Enabling or disabling channels....9
7 Firmware Update....10
8 Sensor Specifications....12
8.1 General specifications....12
8.2 Mechanical specifications....12
9 Electronic Interface Specifications....13
9.1 Electrical specifications....13
9.2 Mechanical specifications....13
10 Absolute Maximum Ratings....13
11 Contact Information....14

Information in this datasheet is believed to be correct but Sercalo reserves the right to change specifications without notice at any time. [38-1199]

This document and its entire content are proprietary and confidential to Sercalo Microtechnology Ltd. Neither this document, nor any part of it, may be disclosed or conveyed to, used by or copied for, any third party without the prior written consent of Sercalo Microtechnology Ltd. All rights reserved. © Sercalo Microtechnology Ltd.

1 In This Manual

This manual describes the optical, electrical and mechanical specifications of the FOA electronic interface.

2 Quick Start

The typical connection of the electronic interface is depicted on Figure 1.

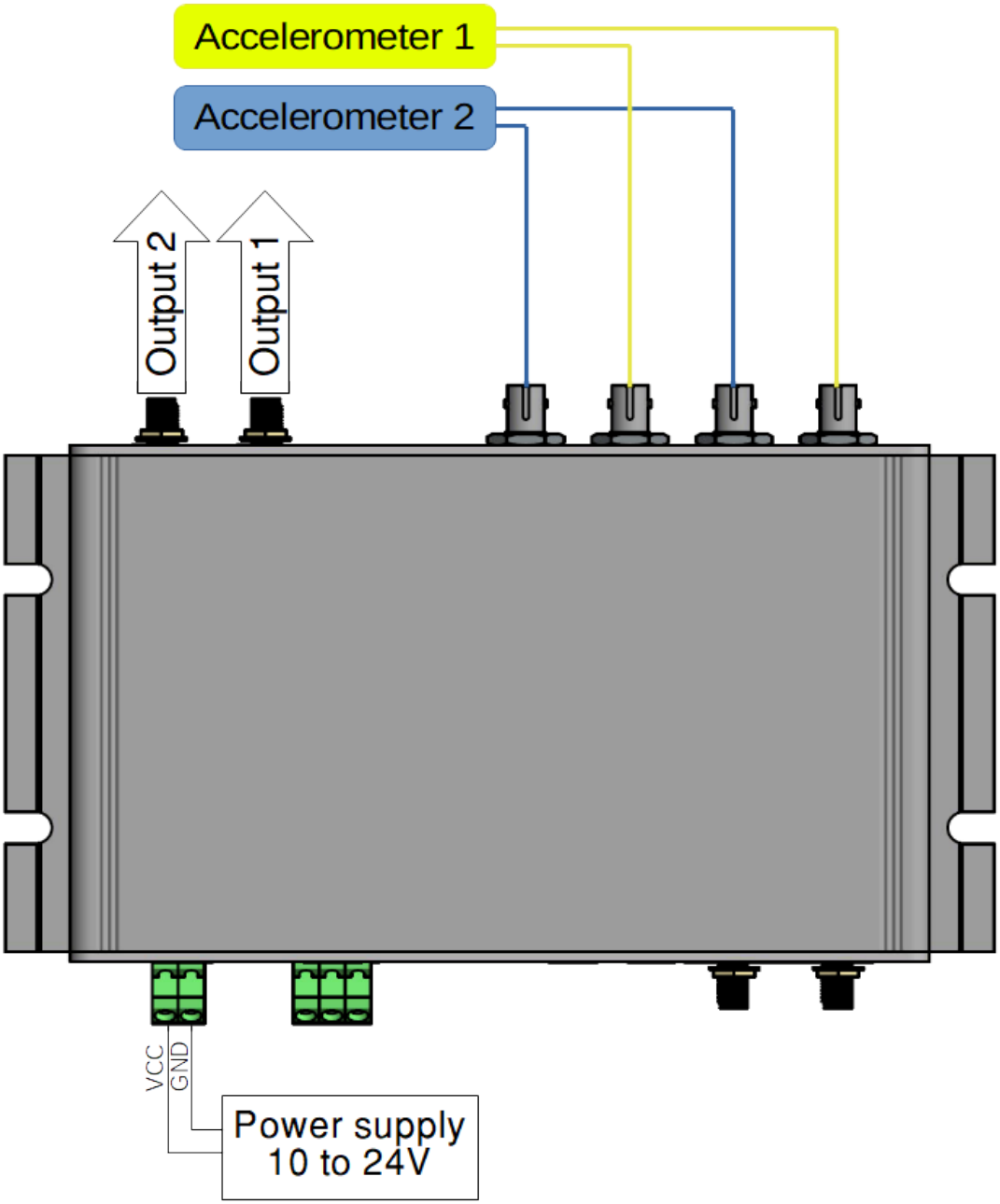

Figure 1 – Connecting the electronic interface to the accelerometers

Information in this datasheet is believed to be correct but Sercalo reserves the right to change specifications without notice at any time. [38-1199]

This document and its entire content are proprietary and confidential to Sercalo Microtechnology Ltd. Neither this document, nor any part of it, may be disclosed or conveyed to, used by or copied for, any third party without the prior written consent of Sercalo Microtechnology Ltd. All rights reserved. © Sercalo Microtechnology Ltd.

3 Product Layout

Figures 2 to 5 depict the device layout. All dimensions are shown in millimeters. It is recommended not to expose the Evaluation Board to bending or twisting.

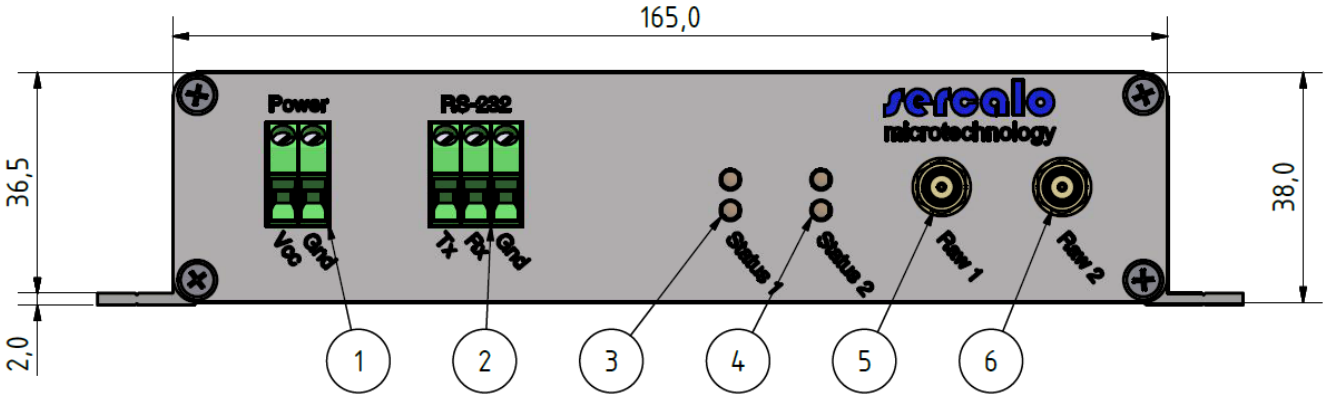

Figure 2 – Front panel

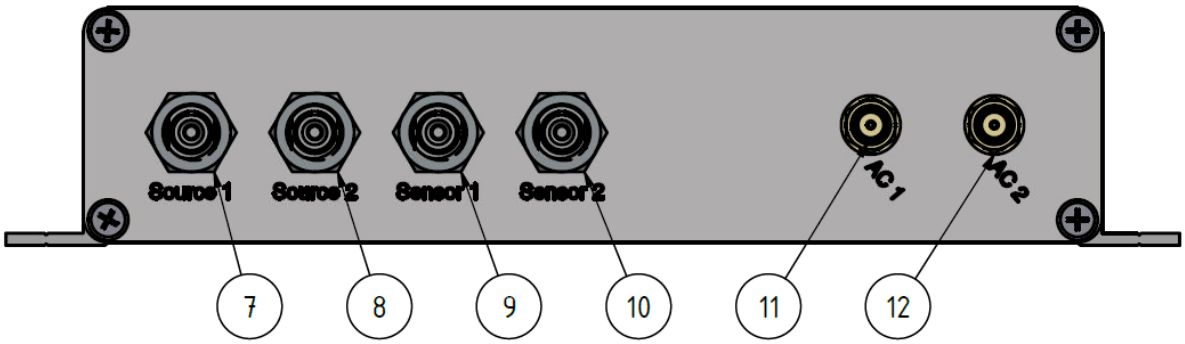

Figure 3 – Rear panel

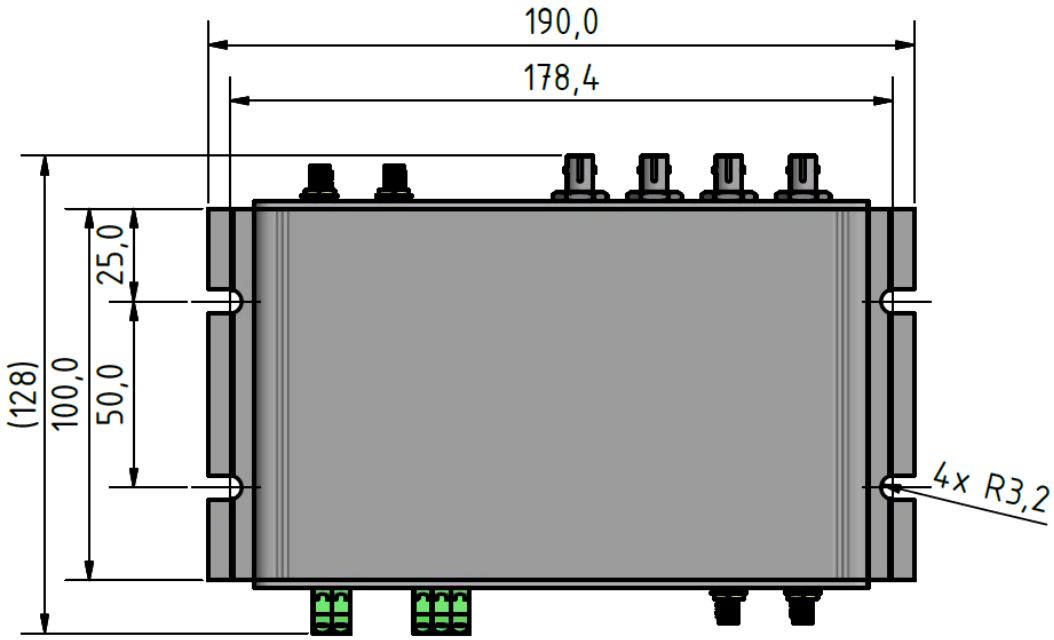

Figure 4 – Top view

Information in this datasheet is believed to be correct but Sercalo reserves the right to change specifications without notice at any time. [38-1199]

This document and its entire content are proprietary and confidential to Sercalo Microtechnology Ltd. Neither this document, nor any part of it, may be disclosed or conveyed to, used by or copied for, any third party without the prior written consent of Sercalo Microtechnology Ltd. All rights reserved. © Sercalo Microtechnology Ltd.

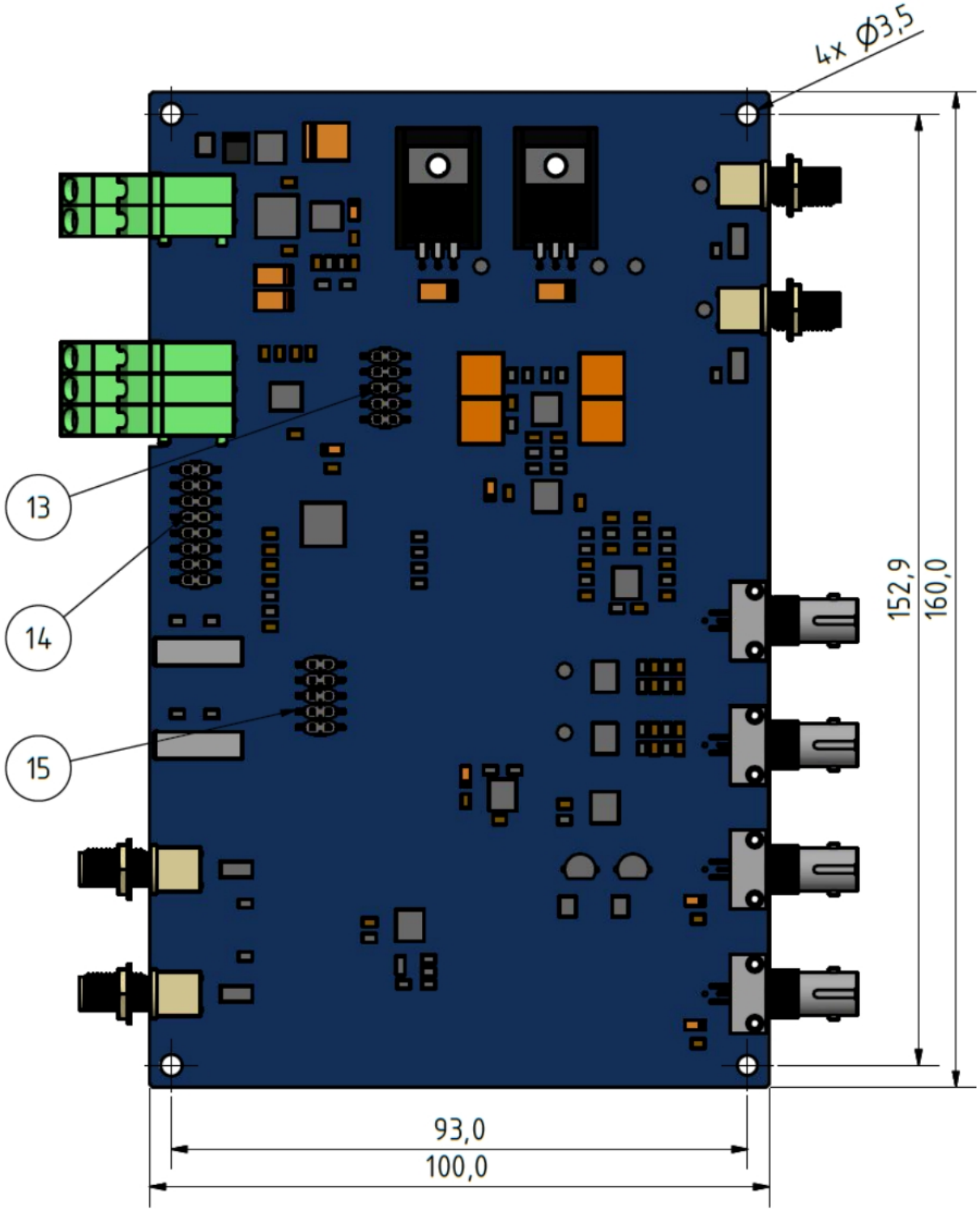

Figure 5 – Evaluation board

Information in this datasheet is believed to be correct but Sercalo reserves the right to change specifications without notice at any time. [38-1199]

This document and its entire content are proprietary and confidential to Sercalo Microtechnology Ltd. Neither this document, nor any part of it, may be disclosed or conveyed to, used by or copied for, any third party without the prior written consent of Sercalo Microtechnology Ltd. All rights reserved. © Sercalo Microtechnology Ltd.

Item	Description	Type
1	Power supply	Phoenix Contact DMKDS 2,5 – 1740000
2	RS-232 interface	Phoenix Contact DMKDS 2,5 – 1740000
3	Power status (channel 1)	-
4	Power status (channel 2)	-
5	Raw output (channel 1)	SMA, female/jack
6	Raw output (channel 2)	SMA, female/jack
7	LED source (channel 1)	ST optical connector
8	LED source (channel 2)	ST optical connector
9	Detector (channel 1)	ST optical connector
10	Detector (channel 2)	ST optical connector
11	AC output (channel 1)	SMA, female/jack
12	AC output (channel 2)	SMA, female/jack
13	Manual calibration connector	IDC .100” 2x5 contacts
14	Optional/jumpers connectors	IDC .100” 2x7 contacts
15	Debug connector (for internal use only)	IDC .100” 2x5 contacts

Table 1 – List of available connectors

4 Connector Pin Assignments

The pin assignments for the connectors are detailed in the following paragraph.

4.1 Power supply connector (#1)

Pin	Name	Description
1	VDD	Positive supply voltage
2	GND	Power ground

Table 2 – Pin assignment of manual calibration connector

Information in this datasheet is believed to be correct but Sercalo reserves the right to change specifications without notice at any time. [38-1199]

This document and its entire content are proprietary and confidential to Sercalo Microtechnology Ltd. Neither this document, nor any part of it, may be disclosed or conveyed to, used by or copied for, any third party without the prior written consent of Sercalo Microtechnology Ltd. All rights reserved. © Sercalo Microtechnology Ltd.

4.2 Optional/jumpers connector (#14)

Jumper pins	Description
1-2	Power status mode control
3-4	Automatic average power control
5-6	Reserved
7-8	Reserved
9-10	Reserved
11-12	Reserved
13-14	Reserved

Table 3 – Pin assignment of optional/jumpers connector

4.3 Manual calibration connector (#13)

Control lines are active low, that is they are asserted when set to ground. Unconnected control lines are kept to logic high ('1') through internal pull-up resistors.

Pin	Name	Description
1	GND	Digital ground
2	CH1OK	Digital channel 1 OK
3	BIAS+	Adjust bias +
4	BIAS-	Adjust bias -
5	GND	Digital ground
6	GAIN+	Adjust gain +
7	CH2OK	Adjust channel 2 OK
8	GAIN-	Adjust gain -
9	RCA	Range control A
10	RCB	Range control B

Table 4 – Pin assignment of manual calibration connector

Power Range	Range control A	Range control B
0	1	1
1	0	1
2	1	0
3	0	0

Table 5 – Range selector (pins #9 and #10)

Information in this datasheet is believed to be correct but Sercalo reserves the right to change specifications without notice at any time. [38-1199]

This document and its entire content are proprietary and confidential to Sercalo Microtechnology Ltd. Neither this document, nor any part of it, may be disclosed or conveyed to, used by or copied for, any third party without the prior written consent of Sercalo Microtechnology Ltd. All rights reserved. © Sercalo Microtechnology Ltd.

5 Jumpers Connectors

5.1 Power status mode control

Jumper #1 (pins 1-2 of connector 14, see Figure 5 and Table 3) defines the behavior of the power status signaling LEDs on front panel.

Status	Behavior
on	Green LED: optical power is above the noise threshold
	Red LED: no optical power detected, fiber link is open or broken
off	Green LED: DC voltage level on receiver is equal to calibration value ± 100 mV
	Red LED: output voltage is outside of the above range
	Blinking red LED: no optical power detected, fiber link is open or broken

Table 6 – Power status mode control jumper

5.2 Automatic average power control

The electronic interface can automatically compensate any variation in the average power at the receiver caused by dust on optical connectors, bend loss in optical fibers, temperature drifts, electrical component aging, etc. to maintain stable sensitivity over time. This is archived by adjusting the output power of LED sources and the gain of detectors. This feature is controlled by the jumper #2 (pins 3-4 of connector 14, see Figure 5 and Table 3).

Status	Behavior
on	Average power is automatically adjusted by the electronic interface
off	Current of LED sources and gain of detectors are held to last calibration values

Table 7 – Automatic average power control jumper

6 Calibration Procedure

There is normally no need to modify the pre-programmed calibration since the *automatic average power control* (see chapter 5.2) can compensate most of the drifts that could occur during device lifetime.

Nevertheless, user can modify the factory calibration using connector 13 (see Figure 5). Control lines are active low, that is they are asserted when set to ground. Unconnected control lines are kept to logic high (‘1’) through internal pull-up resistors. Figure 6 shows an example of a manual calibration control box.

Information in this datasheet is believed to be correct but Sercalo reserves the right to change specifications without notice at any time. [38-1199]

This document and its entire content are proprietary and confidential to Sercalo Microtechnology Ltd. Neither this document, nor any part of it, may be disclosed or conveyed to, used by or copied for, any third party without the prior written consent of Sercalo Microtechnology Ltd. All rights reserved. © Sercalo Microtechnology Ltd.

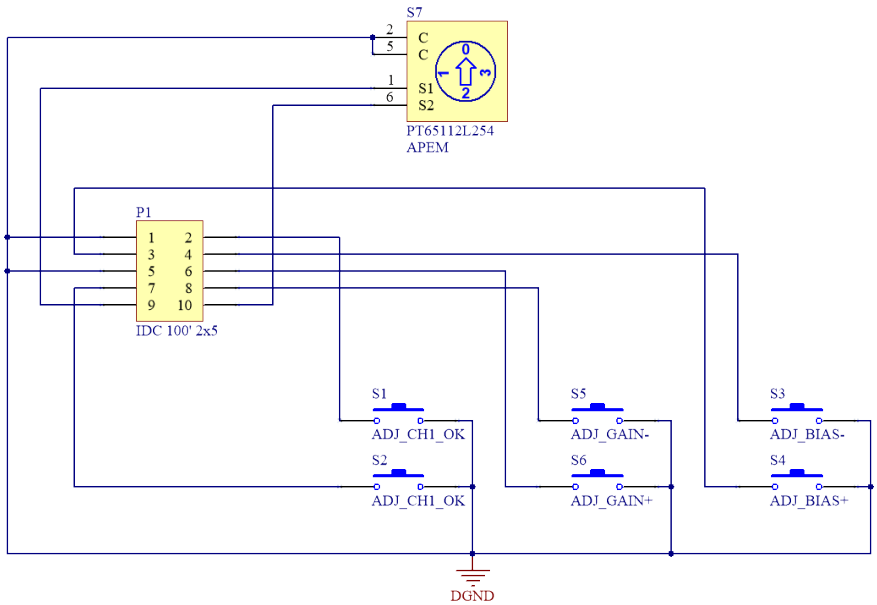

Figure 6 – Calibration control box suggested circuit

This is the suggested calibration procedure for channel 1 (procedure for channel 2 is analogous):

1. Open the electronic interface enclosure and connect the calibration control box to connector 13.
2. Connect the accelerometer to *Source 1* and *Sensor 1*.
3. Connect DC voltmeter to *RAW 1*.
4. On the calibration control box, choose power range number zero (*Range control A* and *Range control B* both unasserted), then assert *Digital channel 1 OK* for more than two seconds. The red and green status LEDs on front panel will start blinking alternatively.
5. Use *Adjust bias* + and *Adjust bias* - to adjust the source power until the voltmeter will display the correct voltage for obtaining 100 mV/g (this value is available on the calibration report of the accelerometer). Increase the power range selector if this is not achievable with the power range in use.
6. Store the new calibration by asserting *Digital channel 1 OK* for more than two seconds.

Note: for better accuracy, always choose the lowest range that permits to select the target voltage.

6.1 Enabling or disabling channels

Channels can be independently enabled or disabled to reduce power consumption.

<u>For disabling a channel:</u>

1. Open the electronic interface enclosure and connect the calibration control box to connector 13.
2. Assert *Digital channel 1 OK* (or *Digital channel 2 OK* for disabling channel 2) for more than two seconds. The corresponding red and green status LEDs on front panel will start blinking alternatively.
3. Assert *Adjust bias* + and *Adjust bias* – for more than 2 seconds. The status LEDs will stop blinking until the two control lines are unasserted.
4. Confirm the new setting by asserting *Digital channel 1 OK* (or *Digital channel 2 OK* for channel 2) for more than two seconds.
5. Both red and green status LEDs will turn off indicating that the channel is disabled.

<u>For enabling a channel:</u>

Information in this datasheet is believed to be correct but Sercalo reserves the right to change specifications without notice at any time. [38-1199]

This document and its entire content are proprietary and confidential to Sercalo Microtechnology Ltd. Neither this document, nor any part of it, may be disclosed or conveyed to, used by or copied for, any third party without the prior written consent of Sercalo Microtechnology Ltd. All rights reserved. © Sercalo Microtechnology Ltd.

1. Open the electronic interface enclosure and connect the calibration control box to connector 13.
2. Assert *Digital channel 1 OK* (or *Digital channel 2 OK* for disabling channel 2) for more than two seconds. The corresponding red and green status LEDs on front panel will start blinking alternatively.
3. Assert *Adjust bias* + and *Adjust bias* – for more than 2 seconds. The status LEDs will stop blinking until the two control lines are unasserted.
4. Confirm the new setting by asserting *Digital channel 1 OK* (or *Digital channel 2 OK* for channel 2) for more than two seconds.
5. Depending on the optical power level at the receiver, the red or the green status LED on front panel will turn on.

7 Firmware Update

The following procedure permits to update the firmware using the RS-232 interface and PC.

1. Connect the power supply.
2. Connect RS-232 interface to PC.
3. Execute **FwUpdater.exe**. Note: to execute this software without errors, it may be necessary to install the *Visual Basic 6.0 Run-time redistribution pack*. It is downloadable for free at the following link: http://www.microsoft.com/en-us/download/details.aspx?id=24417
4. Choose the COM port associated to the device from the drop-down list and click [**Connect device**].

5. If the device is correctly detected, a series of information regarding the currently installed firmware will be displayed. Click on the **[…]** button on the bottom of the window and choose the *HEX* file containing the update.

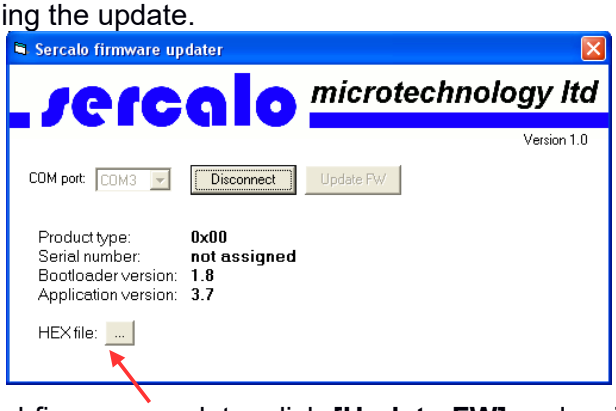

6. To apply the selected firmware update, click **[Update FW]** and wait until the progress bar will reach 100%. Once the firmware is correctly update, the new version will be displayed in the updater window.

Information in this datasheet is believed to be correct but Sercalo reserves the right to change specifications without notice at any time. [38-1199]

This document and its entire content are proprietary and confidential to Sercalo Microtechnology Ltd. Neither this document, nor any part of it, may be disclosed or conveyed to, used by or copied for, any third party without the prior written consent of Sercalo Microtechnology Ltd. All rights reserved. © Sercalo Microtechnology Ltd.

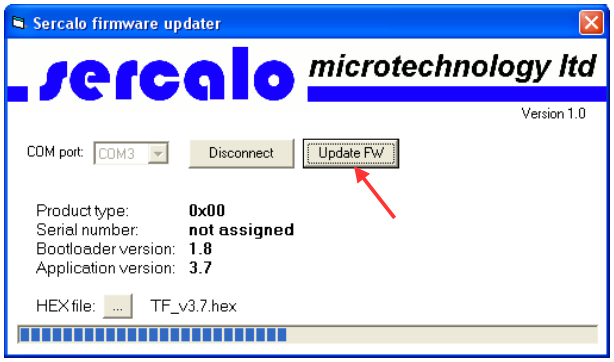

7. Click on the **[Disconnect]** button and close the updater.

8 Sensor Specifications

8.1 General specifications

	Unit	Min	Typ	Max
Low-pass frequency	Hz		0	
High-pass frequency (-3 dB)	Hz	1100		
Variation of linearity (dB/g) between 10-500 Hz	%			3
Maximum acceleration	g			40
Maximum shock acceleration	g			1500
Noise density	µg/µHz			100
Sensitivity	dB/g		0.06	
Sensitivity temperature coefficient	ppm/°C		TBM	

8.2 Mechanical specifications

	Unit	Min	Typ	Max
Optical fiber type			Multimode 100/125 µm	
Material of sensor head			Stainless steel (FOAS) or MACOR (c-FOAS)	
Operation temperature (FOAS)	°C	-40		85
Operation temperature (c-FOAS)	°C	-40		155
Immunity			100% passive sensing design	
Humidity	%RH	0		95
Dimensions	mm		28 x Ø6	
ROHS Compliance			2011/65/EU (no exceptions)	

Information in this datasheet is believed to be correct but Sercalo reserves the right to change specifications without notice at any time. [38-1199]

This document and its entire content are proprietary and confidential to Sercalo Microtechnology Ltd. Neither this document, nor any part of it, may be disclosed or conveyed to, used by or copied for, any third party without the prior written consent of Sercalo Microtechnology Ltd. All rights reserved. © Sercalo Microtechnology Ltd.

9 Electronic Interface Specifications

9.1 Electrical specifications

	Unit	Min	Typ	Max
Supply voltage (VDD)	V	10		24
Power consumption	W			5
RS-232 speed	baud		115200	
RS-232 Tx space voltage	V	5	5.4	
RS-232 Tx mark voltage	V		-5.4	-5
RS-232 Rx positive-going threshold voltage	V		1.8	2.4
RS-232 Rx negative-going thresh-old voltage	V	0.8	1.4	
Input logic level low	V		0	0.6
Input logic level high	V	2.4	5	
Output logic level low	V		0	0.6
Output logic level high	V	2.6	3.3	
RAW output bandwidth	Hz	0		2500
AC output bias	V	5.94	6	6.06
AC output bandwidth	Hz	0.1		2500
AC output gain (after calibration)	mV/g	98	100	102
AC output phase shift	deg		0	
AC output impedance	ohm		100	

9.2 Mechanical specifications

	Unit	Min	Typ	Max
Dimensions (enclosure)	mm	190 x 128 x 38		
Dimensions (evaluation board only)	mm	160 x 100		
ROHS Compliance		2015/863/EU (exceptions 7(a), 7(c)-I)		

10 Absolute Maximum Ratings

Applicable absolute maximum ratings for the full operating temperature range without causing irreversible damage to the device are listed in Table 7.

Information in this datasheet is believed to be correct but Sercalo reserves the right to change specifications without notice at any time. [38-1199]

This document and its entire content are proprietary and confidential to Sercalo Microtechnology Ltd. Neither this document, nor any part of it, may be disclosed or conveyed to, used by or copied for, any third party without the prior written consent of Sercalo Microtechnology Ltd. All rights reserved. © Sercalo Microtechnology Ltd.

Parameter	Unit	Min	Max
Operation temperature	°C	0	75
Storage temperature	°C	-55	100
Voltage on VDD	V	GND-0.3	26
Voltage on any IO pin except RS-232	V	GND-0.2	5.5
RS-232 Tx voltage to ground[1]	V	±13.2	
RS-232 Rx voltage to ground[1]	V	±25	
Total current sunk into VDD	mA		1000
Current sourced or sunk by any IO pin	mA	-100	100

Table 7 – Absolute maximum ratings

11 Contact Information

sercalo Microtechnology Ltd

Landstrasse 151, 9494 Schaan

Principality of Liechtenstein

Tel.: +423 237 57 97

Fax: +423 237 57 48

http://www.sercalo.com

Email: info@sercalo.com

1 Serial port connection pins, including ground, are ±15 kV ESD protected

Information in this datasheet is believed to be correct but Sercalo reserves the right to change specifications without notice at any time. [38-1199]

This document and its entire content are proprietary and confidential to Sercalo Microtechnology Ltd. Neither this document, nor any part of it, may be disclosed or conveyed to, used by or copied for, any third party without the prior written consent of Sercalo Microtechnology Ltd. All rights reserved. © Sercalo Microtechnology Ltd.