SCBU
Coaxial Fiber Optic Matrix Switch

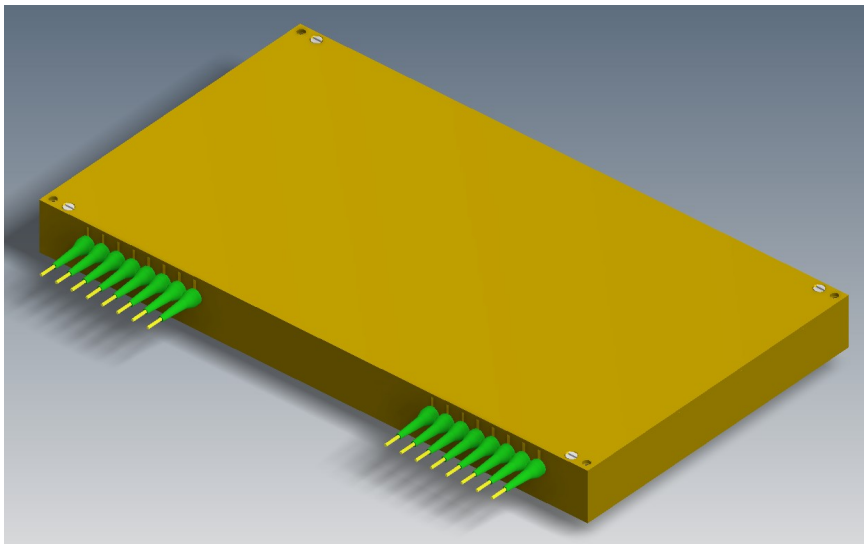

Revision 1.4

August 2020

Information in this datasheet is believed to be correct but Sercalo reserves the right to change specifications without notice at any time. [100-1207]

This document and its entire content are proprietary and confidential to Sercalo Microtechnology Ltd. Neither this document, nor any part of it, may be disclosed or conveyed to, used by or copied for, any third party without the prior written consent of Sercalo Microtechnology Ltd. All rights reserved. © Sercalo Microtechnology Ltd.

TABLE OF CONTENTS

1 IN THIS MANUAL....3

2 DESCRIPTION....3

3 PRODUCT DIMENSIONS....4

4 CONNECTOR PIN ASSIGNMENTS....6

5 ADAPTER BOARD....7

6 RIBBON FIBER COLOR CODES....9
6.1 8-FIBER RIBBONS....9
6.2 12-FIBER RIBBONS....10

7 USING THE UART INTERFACE....10
7.1 COMMAND SYNTAX....11
7.2 CONNECT THE UART INTERFACE TO A PC....11
7.3 CONFIGURING THE USB INTERFACE....12
7.3.1 Installing driver in Windows XP....13
7.3.2 Installing driver in Windows 7....15

8 USING THE SMBUS/I²C INTERFACE....16
8.1 SEND COMMANDS TO DEVICE....17
8.2 RECEIVE DATA FROM DEVICE....17
8.3 RECEIVE AN ERROR FROM DEVICE....18
8.4 HOLD MASTER COMMUNICATION SEQUENCE....19
8.5 EXAMPLE OF CRC-8 GENERATION....19

9 COMMAND REFERENCE....21
9.1 ID – RETURNS THE EQUIPMENT IDENTIFICATION....21
9.2 RST – RESETS THE BOARD....22
9.3 ERM – RETURNS OR CHANGES THE ERROR RETURNING MODE....22
9.4 TMP – RETURNS THE TEMPERATURE OF THE MICROCONTROLLER....23
9.5 UART – CHANGES THE BAUD RATE OF THE UART INTERFACE....23
9.6 PTY – CHANGES THE PARITY SETTING OF THE UART INTERFACE....24
9.7 IIC – RETURNS OR CHANGES THE ADDRESS FOR SMBUS/I²C....25
9.8 SET – SETS THE NETWORK CONFIGURATION....26
9.8.1 1xN tree switches....26
9.8.2 2xN tree switches....26
9.8.3 8x8 matrices....27
9.8.4 16x16 matrices....27
9.8.5 Custom networks....28
9.9 POS – RETURNS THE NETWORK CONFIGURATION....28
9.9.1 1xN tree switches....28
9.9.2 2xN tree switches....29
9.9.3 8x8 matrices....29
9.9.4 16x16 matrices....30
9.9.5 Custom networks....30
9.10 BAND – RETURNS OR SETS THE OPTICAL BAND....31
9.11 DBAND – RETURNS OR SETS THE DEFAULT OPTICAL BAND....32

10 ERROR CODES....33

11 OPTICAL SPECIFICATIONS....33

Information in this datasheet is believed to be correct but Sercalo reserves the right to change specifications without notice at any time. [100-1207]

This document and its entire content are proprietary and confidential to Sercalo Microtechnology Ltd. Neither this document, nor any part of it, may be disclosed or conveyed to, used by or copied for, any third party without the prior written consent of Sercalo Microtechnology Ltd. All rights reserved. © Sercalo Microtechnology Ltd.

12 ELECTRICAL SPECIFICATIONS.....33

13 PACKAGE SPECIFICATIONS.....34

14 ABSOLUTE MAXIMUM RATINGS.....34

15 REVISION HISTORY.....34

16 ORDERING INFORMATION.....35

16.1 SCBU SWITCH.....35

16.2 *ADAPTER* BOARD.....35

17 CONTACT INFORMATION.....35

1 In This Manual

This manual describes the optical, electrical and mechanical specifications of the SCBU coaxial fiber optic matrix switches. It additionally details the communication protocol required to operate the device.

2 Description

sercalo's fiber optic NxM switches are bidirectional opto-mechanical switches based on coaxial design where a matrix of MEMS mirrors redirects light from N fibers on Port A to M fibers on Port B (see Figure 1). The switches communicate over a UART interface with TTL voltage levels, USB or I^2C/SMBus.

The optical networks can be based on a strictly non-blocking matrix (from 4x4 up to 16x16 ports) or on a tree structure (up to 1x1116 ports). The switch is non-latching: at power-off it breaks the optical connections and routing of ports is not defined. An additional status where the channels are disconnected is available. The component is bidirectional, i.e. the common port can be used as input or output of the light signal. The miniature package withstands rugged environments and is well suited for direct mounting on printed circuit boards.

The underlying MEMS technology results in low insertion loss and low crosstalk between channels while keeping a constant switching performance over life. The hermetically sealed MEMS and the laser welded collimators guarantee broad temperature range and superior long term stability. The part is designed to conform to Telcordia 1221 reliability standards. No epoxy is present in the optical path.

Information in this datasheet is believed to be correct but Sercalo reserves the right to change specifications without notice at any time. [100-1207]

This document and its entire content are proprietary and confidential to Sercalo Microtechnology Ltd. Neither this document, nor any part of it, may be disclosed or conveyed to, used by or copied for, any third party without the prior written consent of Sercalo Microtechnology Ltd. All rights reserved. © Sercalo Microtechnology Ltd.

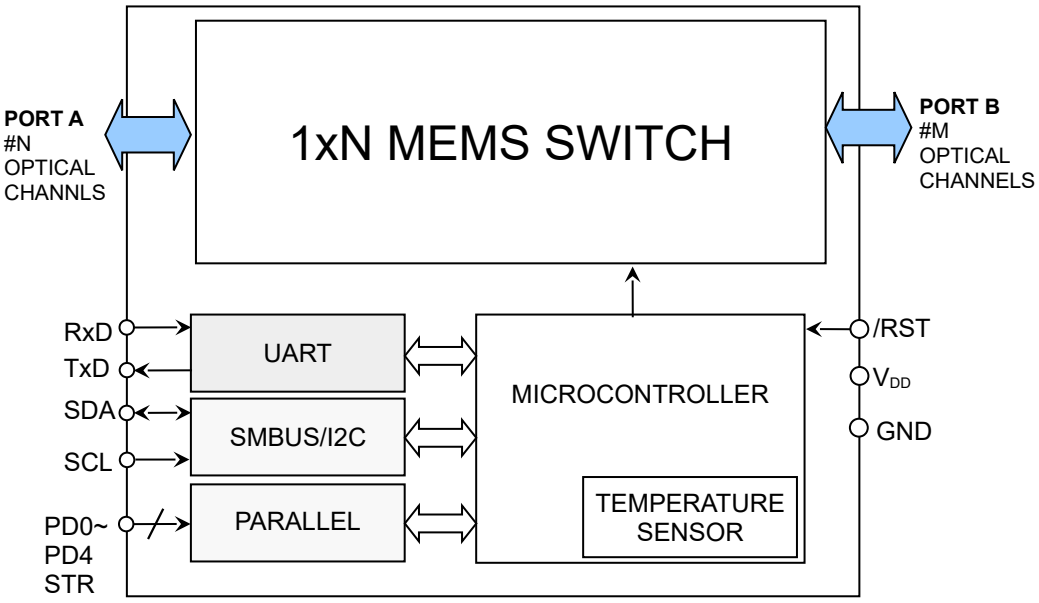

Figure 1 – Functional block diagram

3 Product Dimensions

Figures 2-4 depict the device layout. All dimensions are shown in millimeters.

- The **small size** SCBU is suitable for switches up to 1x108 ports
- The **medium size** SCBU is suitable for switches up to 1x540 ports and matrix networks up to 8x8 ports
- The **large size** SCBU is suitable for switches up to 1x1116 ports and matrix networks up to 16x16 ports

Information in this datasheet is believed to be correct but Sercalo reserves the right to change specifications without notice at any time. [100-1207]

This document and its entire content are proprietary and confidential to Sercalo Microtechnology Ltd. Neither this document, nor any part of it, may be disclosed or conveyed to, used by or copied for, any third party without the prior written consent of Sercalo Microtechnology Ltd. All rights reserved. © Sercalo Microtechnology Ltd.

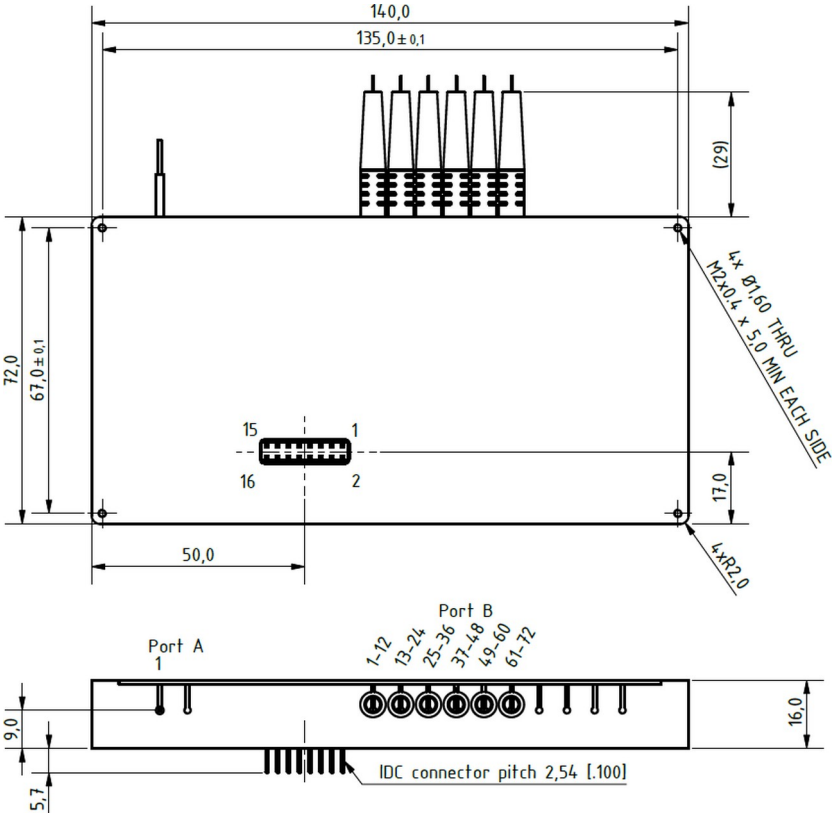

Figure 2 – Device dimensions (SCBU small size)

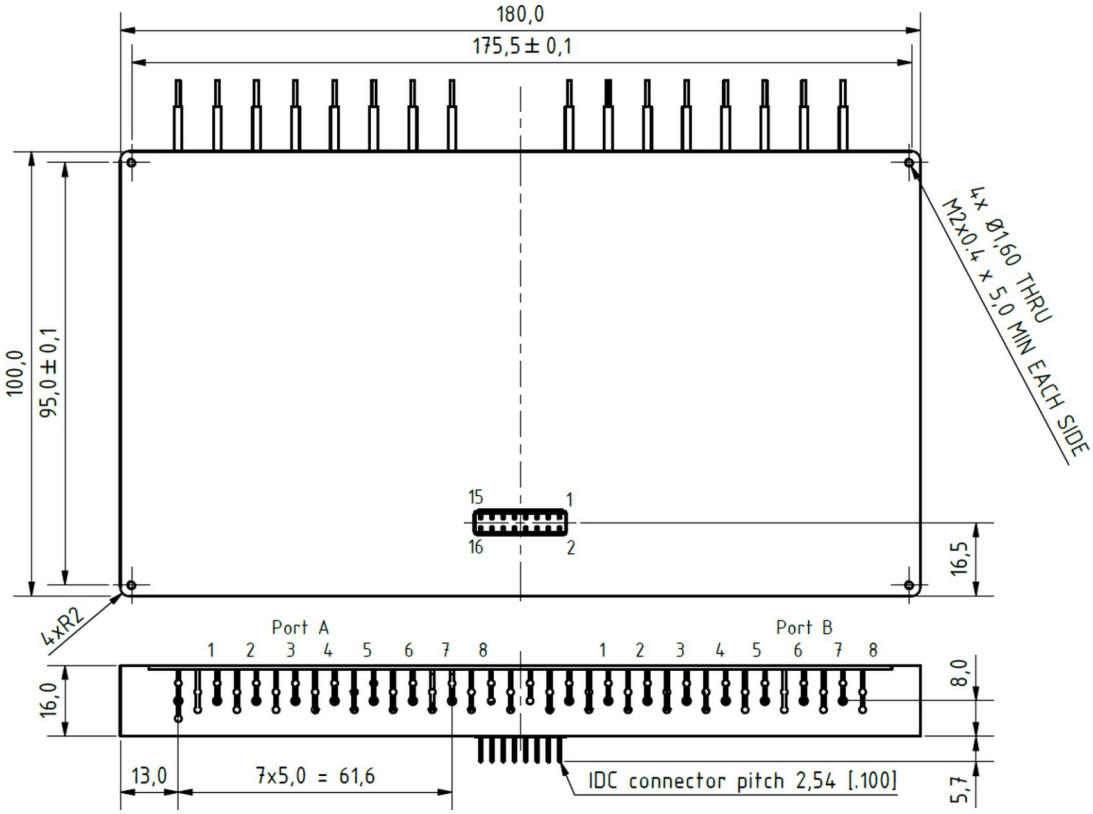

Figure 3 – Device dimensions (SCBU medium size)

Information in this datasheet is believed to be correct but Sercalo reserves the right to change specifications without notice at any time. [100-1207]

This document and its entire content are proprietary and confidential to Sercalo Microtechnology Ltd. Neither this document, nor any part of it, may be disclosed or conveyed to, used by or copied for, any third party without the prior written consent of Sercalo Microtechnology Ltd. All rights reserved. © Sercalo Microtechnology Ltd.

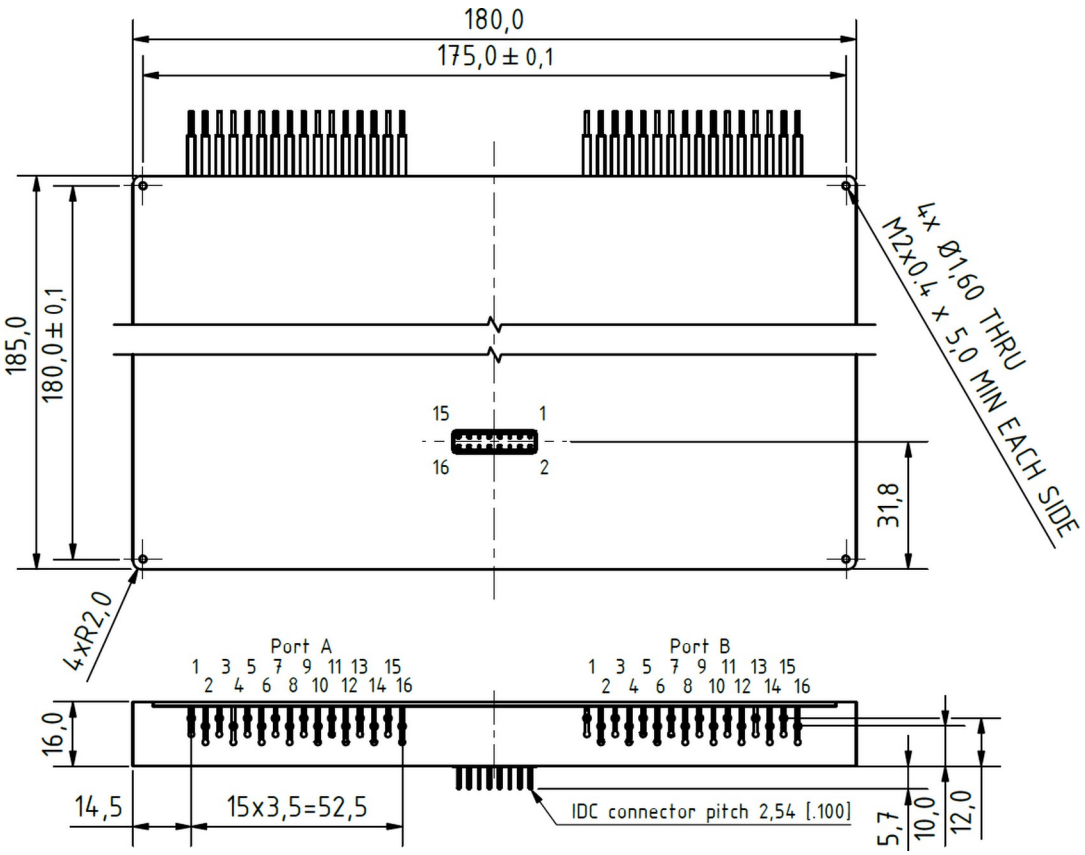

Figure 4 – Device dimensions (SCBU large size)

4 Connector Pin Assignments

The pin assignments for the connector is detailed in Table 1.

Please note the following points:

- ➔ UART TX signal carries data *from* the product, while UART RX signal carries data *to* the product.
- ➔ The UART interface uses TTL/CMOS voltage levels. A voltage translator is required in order to communicate with the driver board using an RS-232 interface (see Section 7.2).
- ➔ Let reserved pins unconnected.

Information in this datasheet is believed to be correct but Sercalo reserves the right to change specifications without notice at any time. [100-1207]

This document and its entire content are proprietary and confidential to Sercalo Microtechnology Ltd. Neither this document, nor any part of it, may be disclosed or conveyed to, used by or copied for, any third party without the prior written consent of Sercalo Microtechnology Ltd. All rights reserved. © Sercalo Microtechnology Ltd.

Pin	Name	Description	Pin	Name	Description
1	GND	Ground	9	VDD	Supply voltage
2	SCL	SMBus/I²C Serial Clock	10	GND	Ground
3	SDA	SMBus/I²C Serial Data	11	-	Reserved
4	$\overline{RST}$	System reset	12	D-	USB D-
5	RX	UART RX data	13	-	Reserved
6	-	Reserved	14	D+	USB D+
7	TX	UART TX data	15	-	Reserved
8	-	Reserved	16	-	Reserved

Table 1 – Connector pin assignment

5 Adapter board

An optional adapter board is available on request. The board layout is depicted in Figure 6 (all dimensions are shown in millimeters).

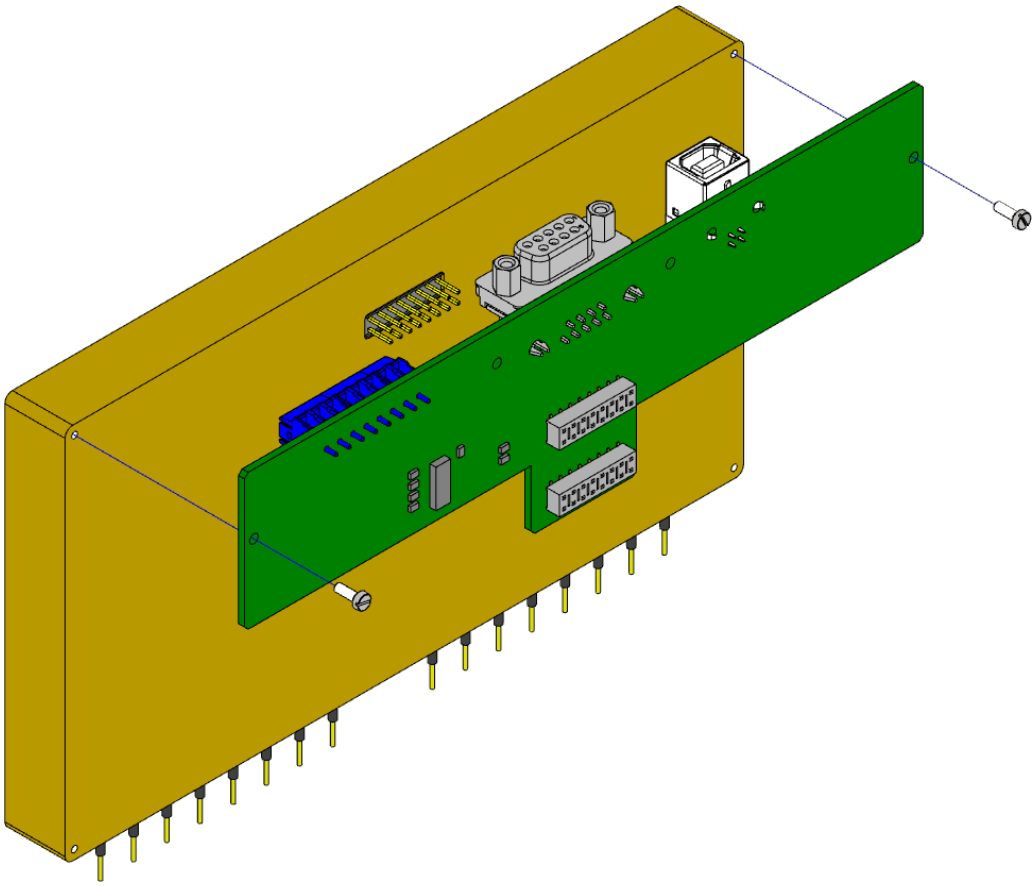

Figure 5 – How to mount adapter board on SCBU switch

Information in this datasheet is believed to be correct but Sercalo reserves the right to change specifications without notice at any time. [100-1207]

This document and its entire content are proprietary and confidential to Sercalo Microtechnology Ltd. Neither this document, nor any part of it, may be disclosed or conveyed to, used by or copied for, any third party without the prior written consent of Sercalo Microtechnology Ltd. All rights reserved. © Sercalo Microtechnology Ltd.

Item	Description
1	Samtec HLE-108-02-G-DV-BE Pinout: see Table 1. Use with SCBU medium size
2	Samtec HLE-108-02-G-DV-BE Pinout: see Table 1. Use with SCBU large size
3	Phoenix contact PT 1,5/ 8-3,5 H Pinout: see Table 3
4	RS-232 D-sub 9-pin female (optional)
5	USB type B

Table 2 – Adapter board connector list

Pin	Name	Description
1	GND	Ground
2	VDD	Supply voltage
3	SCL	SMBus/I^2C Serial Clock
4	SDA	SMBus/I^2C Serial Data
5	RX	UART RX – data to switch, 0-5V (only available if RS-232 connector is not mounted)
6	TX	UART TX – data from switch, 0-5V (only available if RS-232 connector is not mounted)
7	$\overline{RST}$	System reset
8	GND	Ground

Table 3 – Adapter board connector #3 pin assignment

Information in this datasheet is believed to be correct but Sercalo reserves the right to change specifications without notice at any time. [100-1207]

This document and its entire content are proprietary and confidential to Sercalo Microtechnology Ltd. Neither this document, nor any part of it, may be disclosed or conveyed to, used by or copied for, any third party without the prior written consent of Sercalo Microtechnology Ltd. All rights reserved. © Sercalo Microtechnology Ltd.

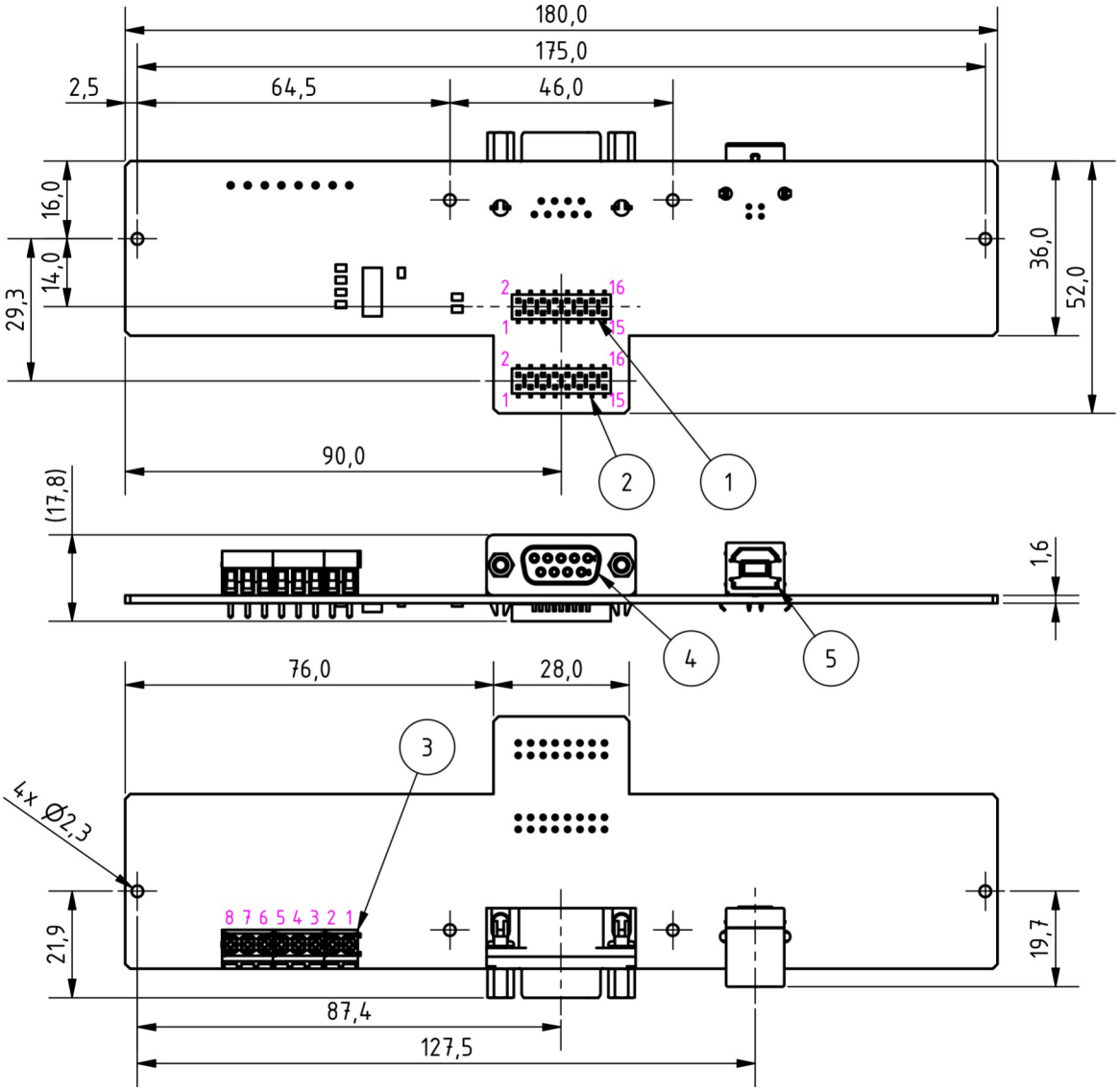

Figure 6 – Adapter board dimensions

6 Ribbon Fiber Color Codes

6.1 8-fiber ribbons

Common fiber(s) is a single fiber with yellow sleeve. Other fibers are organized in ribbons composed by eight fibers and marked as indicated on Table 4.

Information in this datasheet is believed to be correct but Sercalo reserves the right to change specifications without notice at any time. [100-1207]

This document and its entire content are proprietary and confidential to Sercalo Microtechnology Ltd. Neither this document, nor any part of it, may be disclosed or conveyed to, used by or copied for, any third party without the prior written consent of Sercalo Microtechnology Ltd. All rights reserved. © Sercalo Microtechnology Ltd.

Port	Fiber Color
Common(s)	Yellow
1	Blue
2	Orange
3	Green
4	Brown
5	Grey
6	White
7	Red
8	Black

Table 4 – Fiber Colors for 8-fiber ribbons

6.2 12-fiber ribbons

Common fiber(s) is a single fiber with yellow sleeve. Other fibers are organized in ribbons composed by twelve fibers each and marked as indicated in Table 5.

Port	Fiber Color
Common(s)	Yellow
1	Blue
2	Orange
3	Green
4	Brown
5	Grey
6	White
7	Red
8	Black
9	Yellow
10	Purple
11	Rose
12	Turquoise

Table 5 – Fiber Colors for 12-fiber ribbons

7 Using the UART Interface

The device is equipped with a Universal Asynchronous Receiver-Transmitter (UART) with TTL/CMOS-compatible voltage levels. UART TX signal carries data *from* the product, while UART RX signal carries data *to* the product.

Table 6 lists the requirements for the UART settings. The default baud rate (after power on or reset) is 9600 baud. Baud rate remains in effect otherwise changed by the user.

Information in this datasheet is believed to be correct but Sercalo reserves the right to change specifications without notice at any time. [100-1207]

This document and its entire content are proprietary and confidential to Sercalo Microtechnology Ltd. Neither this document, nor any part of it, may be disclosed or conveyed to, used by or copied for, any third party without the prior written consent of Sercalo Microtechnology Ltd. All rights reserved. © Sercalo Microtechnology Ltd.

Parameter	Factory setting
Transmission rate [bps]	9600
Data bits	8
Parity	none
Stop bits	1
Flow control	none

Table 6 – RS-232 settings after power-on or reset

7.1 Command syntax

Commands consist of ASCII characters strings having the following structure:

```
CMD <param1> <…> [opt_param1] […]↵
```

where:

- **CMD** is the command
- **<…>** the angle brackets indicate that the enclosed parameter is *mandatory*
- **[…]** the square brackets indicate that the enclosed parameter is *optional*
- ↵ is the string terminator (end of line).

The following conventions are adopted:

- Commands can be written either in upper-case or lower-case characters.
- Commands and parameters are separated by one or more spaces (ASCII 0x20).
- The system recognizes as end of line any of the forms: LF (Line feed, '\n', ASCII 0x0A) or CR (Carriage return, '\r', ASCII 0x0D), or CR followed by LF (CR+LF, 0x0D 0x0A). Replies always end with the sequence CR+LF.
- The device always replies to commands. The reply can be a command-dependent acknowledgment or an error message.
- Error messages always start with ERR, followed by a space and context-dependent additional data.
- The user should not attempt to send the device a new command until it has completed the current command.

7.2 Connect the UART interface to a PC

The UART interface can be directly connected to microcontrollers and any other electronic device with TTL/CMOS-compatible voltage levels, i.e. logic high ('1') is represented by V_{DD}, while a logic low ('0') is 0V. This is not the case for serial ports on personal computers whose voltage levels complies with the RS-232 standard. By the RS-232 standard a logic high ('1') is represented by a negative voltage (from -3 to -25V) while a logic low ('0') transmits a positive voltage (from +3 to +25V)[1].

[1] https://en.wikipedia.org/wiki/RS-232#Voltage_levels

Information in this datasheet is believed to be correct but Sercalo reserves the right to change specifications without notice at any time. [100-1207]

This document and its entire content are proprietary and confidential to Sercalo Microtechnology Ltd. Neither this document, nor any part of it, may be disclosed or conveyed to, used by or copied for, any third party without the prior written consent of Sercalo Microtechnology Ltd. All rights reserved. © Sercalo Microtechnology Ltd.

One solution is to use the MAX232[2] integrated circuit or one of the many derivatives to convert signals from a RS-232 serial port to TTL signals. The other way is to use a USB-UART bridge based on CP2102 or FT232R integrated circuits which directly converts USB to UART. They are easily available on the market (some suppliers are listed on Table 7).

Supplier	Part Number
DigiKey	768-1017-ND
Mouser	895-TTL-232R-5V-PCB
eXtreme Electronics	SKU00201
Sparkfun	FTDI Basic Breakout - 5V
Adafruit	954

Table 7 – Example of USB-to-UART bridge suppliers

If a Windows-based PC and HyperTerminal are used, the suggested configuration is displayed in Figure 7.

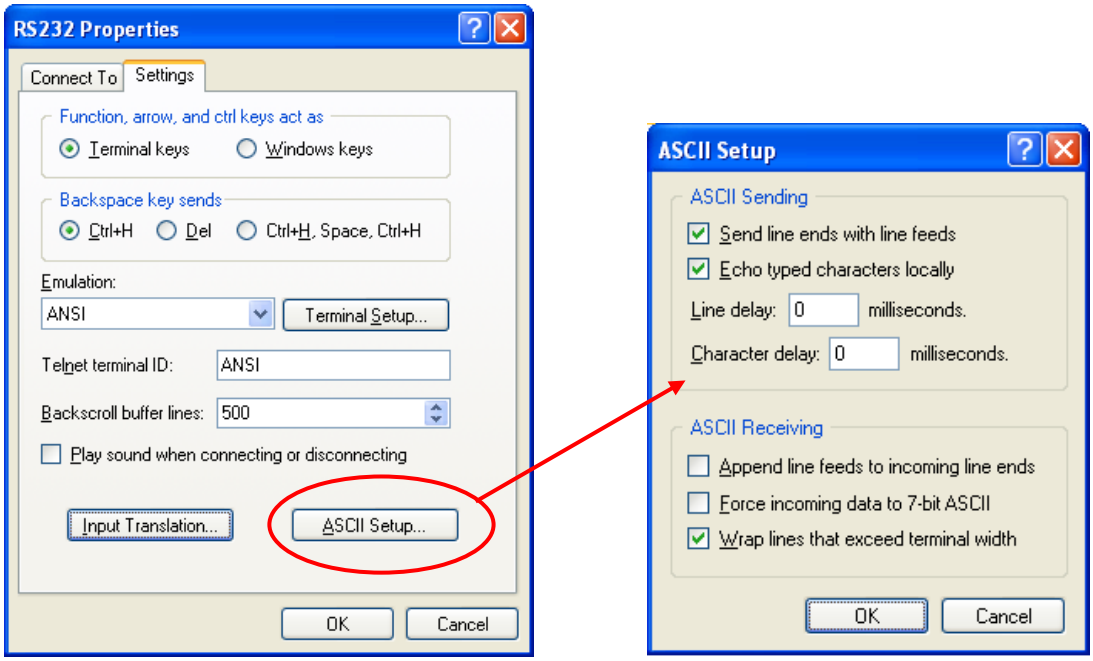

Figure 7 – HyperTerminal RS-232 properties and ASCII setup.

7.3 Configuring the USB interface

The USB interface acts as a Virtual COM Port (VCP): the provided driver causes the device to appear as an additional serial port available to the PC. Application software can access the device in the same way as it would access a standard serial port. If a Windows-based PC and HyperTerminal are used, the suggested configuration is reported in Paragraph 7.2.

Contact sercalo for obtaining latest USB driver.

[2] https://en.wikipedia.org/wiki/MAX232

Information in this datasheet is believed to be correct but Sercalo reserves the right to change specifications without notice at any time. [100-1207]

This document and its entire content are proprietary and confidential to Sercalo Microtechnology Ltd. Neither this document, nor any part of it, may be disclosed or conveyed to, used by or copied for, any third party without the prior written consent of Sercalo Microtechnology Ltd. All rights reserved. © Sercalo Microtechnology Ltd.

7.3.1 Installing driver in Windows XP

1. Connect the device to a free USB port. The New Hardware Found Wizard should appear. At the request to connect to Windows Update, choose "**No, not this time**" then click the [**Next >**] button.

2. On the screen below, select "**Install from a list or specific location (Advanced)**" then click the [**Next >**] button.

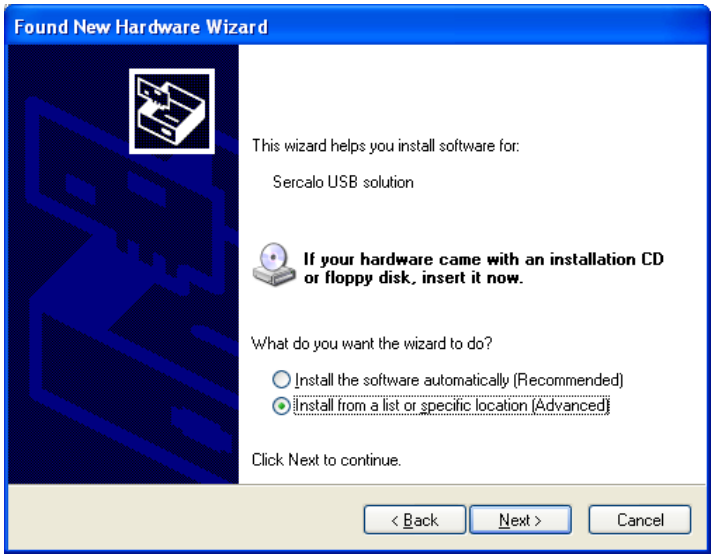

Information in this datasheet is believed to be correct but Sercalo reserves the right to change specifications without notice at any time. [100-1207]

This document and its entire content are proprietary and confidential to Sercalo Microtechnology Ltd. Neither this document, nor any part of it, may be disclosed or conveyed to, used by or copied for, any third party without the prior written consent of Sercalo Microtechnology Ltd. All rights reserved. © Sercalo Microtechnology Ltd.

3. On the screen below:
   Select "**Search for the best driver in these locations**"
   Check "**Include this location in the search**:"
   Use the [**Browse**] button to find the file "**Sercalo_USB.inf**" and click [**OK**]

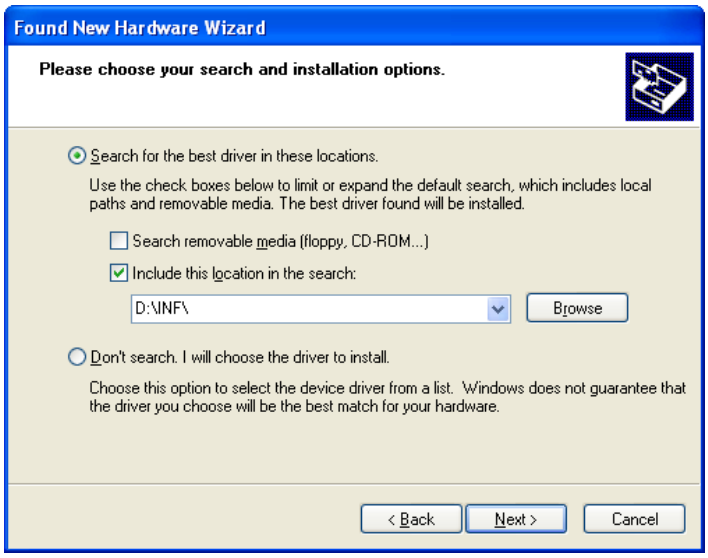

4. If a security warning appears, click [**Continue Anyway**]. The wizard will complete and a new "virtual" COM port will appear in your Device Manager.

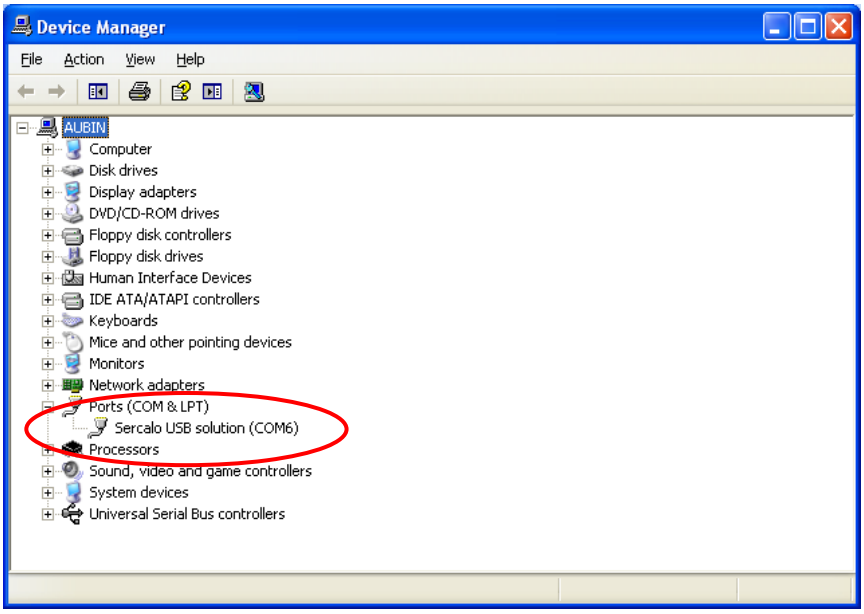

Information in this datasheet is believed to be correct but Sercalo reserves the right to change specifications without notice at any time. [100-1207]

This document and its entire content are proprietary and confidential to Sercalo Microtechnology Ltd. Neither this document, nor any part of it, may be disclosed or conveyed to, used by or copied for, any third party without the prior written consent of Sercalo Microtechnology Ltd. All rights reserved. © Sercalo Microtechnology Ltd.

7.3.2 Installing driver in Windows 7

1. Connect the device to a free USB port. The Driver Software Installation window should appear. Click on "**Skip obtaining driver software from Windows Update**" then click the [**Yes**] button on the confirmation dialog box.

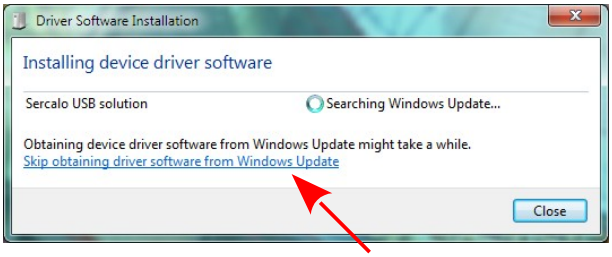

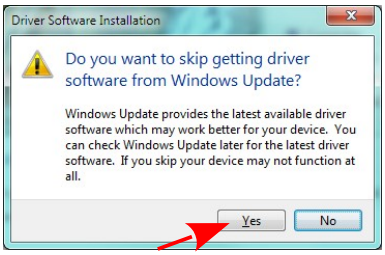

2. The Driver Software Installation window will report that the device was not successfully installed. Close it.

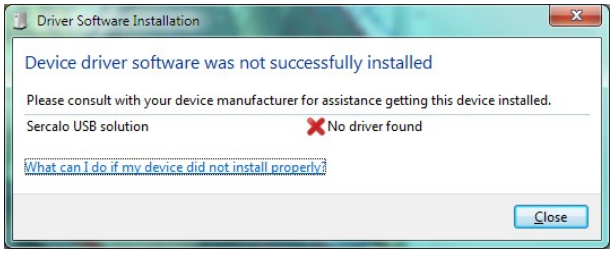

3. Open the Device Manager and right-click on "Sercalo USB solution". On the appearing context menu, choose "**Update Driver Software**".

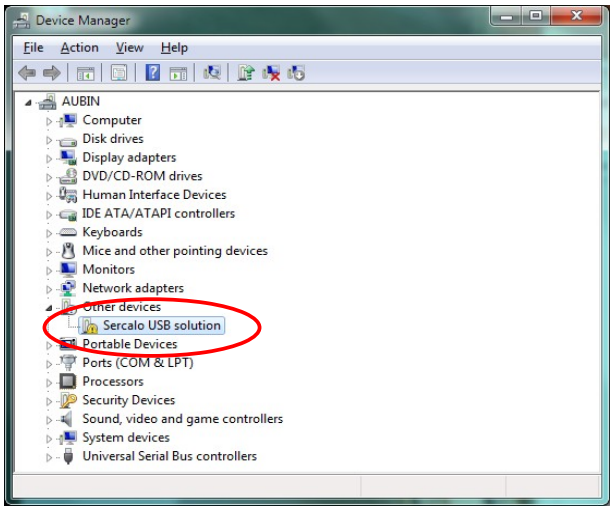

4. On the installation procedure, select "Browse my computer for driver software", then use the [**Browse**] button to find the file "**Sercalo_USB.inf**" and click [**Next**].

Information in this datasheet is believed to be correct but Sercalo reserves the right to change specifications without notice at any time. [100-1207]

This document and its entire content are proprietary and confidential to Sercalo Microtechnology Ltd. Neither this document, nor any part of it, may be disclosed or conveyed to, used by or copied for, any third party without the prior written consent of Sercalo Microtechnology Ltd. All rights reserved. © Sercalo Microtechnology Ltd.

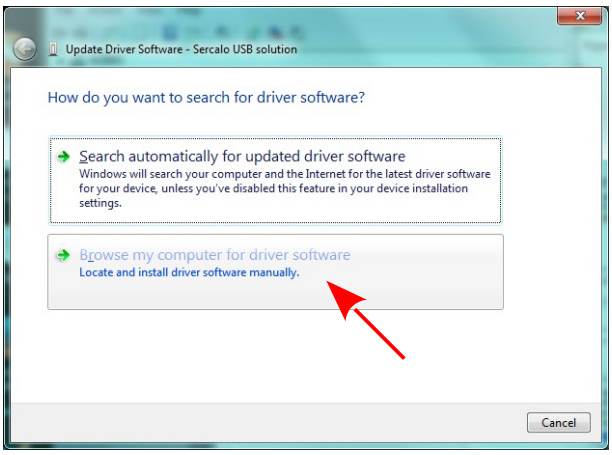

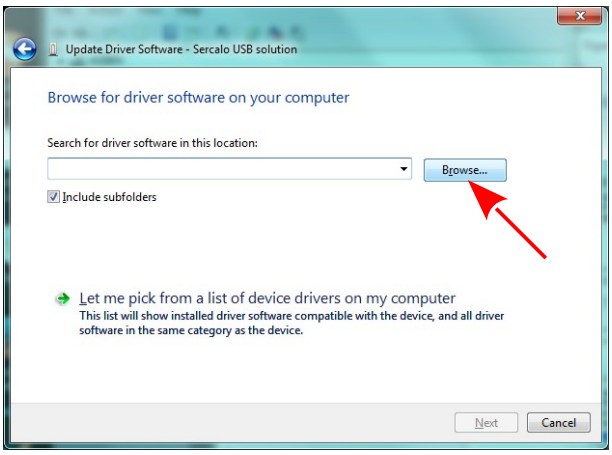

5. If a security warning appears, select "**Install this driver software anyway**". The wizard will complete and a new "virtual" COM port will appear in your Device Manager.

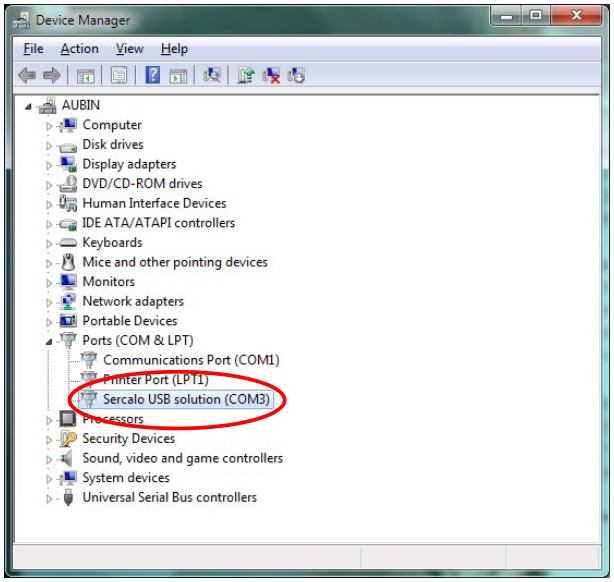

8 Using the SMBus/I²C Interface

The device is equipped with an SMBus serial I/O peripheral that is compliant with both the System Management Bus Specification and the I²C-Bus Specification. SMBus is a trademark of Intel; I²C is a trademark of Phillips Semiconductor.

The device is provided with a factory-programmed address of 0xFE. User can modify the default address using the dedicated command (see Section for details). The new address is stored in the internal flash memory and is preserved during reset and power-off.

Each transmission is terminated with a Packet Error Code (PEC) byte, compliant to SMBus specification version 2.0 and 1.1. The byte is calculated over the entire message including the address and read/write bit (see Section 8.5 for details).

Please note that the device, after a successful write sequence, delay any further transmission by holding SCK low until the command is executed.

Information in this datasheet is believed to be correct but Sercalo reserves the right to change specifications without notice at any time. [100-1207]

This document and its entire content are proprietary and confidential to Sercalo Microtechnology Ltd. Neither this document, nor any part of it, may be disclosed or conveyed to, used by or copied for, any third party without the prior written consent of Sercalo Microtechnology Ltd. All rights reserved. © Sercalo Microtechnology Ltd.

8.1 Send commands to device

A write sequence consists of the following elements (see Figure 8):

1. A *start* condition: it consists of a falling edge on SDA while SCL is high.
2. The *address byte*, i.e. 7 bits corresponding to the device address and the R/W bit set as “write” (the R/W bit is set to logic 1 to indicate a “read” operation and cleared to logic 0 to indicate a “write” operation).
3. A *command code*: refer to Section for a list of available command codes.
4. The *parameter(s) length*, i.e. the number *n* of bytes composing the following optional parameters. This field is mandatory: if no parameters are required, set it to 0x00.
5. The *optional parameters*: refer to Section for a detailed explanation.
6. *CRC-8.*
7. A *stop* condition: it consists of a rising edge on SDA while SCL is high.

The device replies to each received byte with an “ACK” as a confirmation. An ACK consists of a low level on SDA sampled when SCL is high. If the ACK signal is not received, master must abort the transfer.

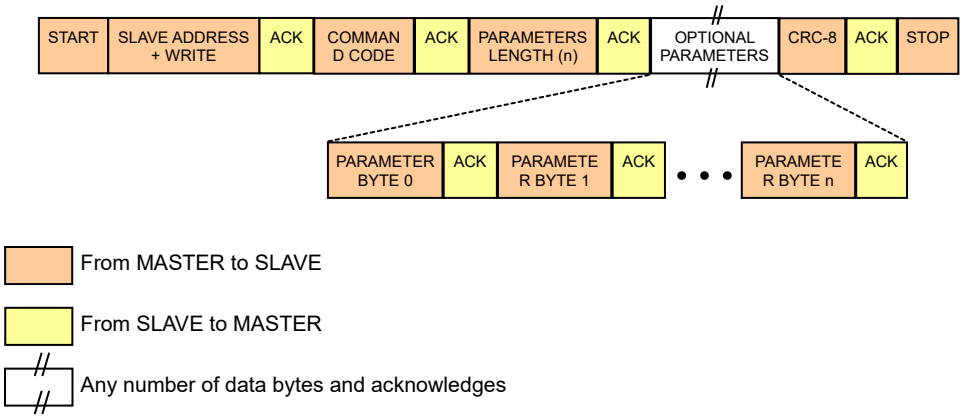

Figure 8 – Typical successful write (master to slave)

8.2 Receive data from device

After a successful transmission, as detailed in paragraph 8.1, device always has a reply that can be optionally read by master. A read sequence for a successfully executed command consists of the following elements (see Figure 9):

1. A *start* condition: it consists of a falling edge on SDA while SCL is high.
2. The *address byte*, i.e. 7 bits corresponding to the device address and the R/W bit set as “read” (the R/W bit is set to logic 1 to indicate a “read” operation and cleared to logic 0 to indicate a “write” operation).
3. A *command code*: it is the last executed command, which this reply refers.
4. The *parameter(s) length*, i.e. the number *n* of bytes composing the following optional parameters. If no parameters will follow, this field is set to 0x00.

Information in this datasheet is believed to be correct but Sercalo reserves the right to change specifications without notice at any time. [100-1207]

This document and its entire content are proprietary and confidential to Sercalo Microtechnology Ltd. Neither this document, nor any part of it, may be disclosed or conveyed to, used by or copied for, any third party without the prior written consent of Sercalo Microtechnology Ltd. All rights reserved. © Sercalo Microtechnology Ltd.

5. The *optional parameters*: refer to Section for a detailed explanation.
6. *CRC-8*.
7. A *stop* condition: it consists of a rising edge on SDA while SCL is high.

The master must replies to each received byte with an “ACK” as a confirmation. An ACK consists of a low level on SDA sampled when SCL is high. Only the last byte must be confirmed with a “NACK”. A NACK consists of a high level on SDA sampled when SCL is high.

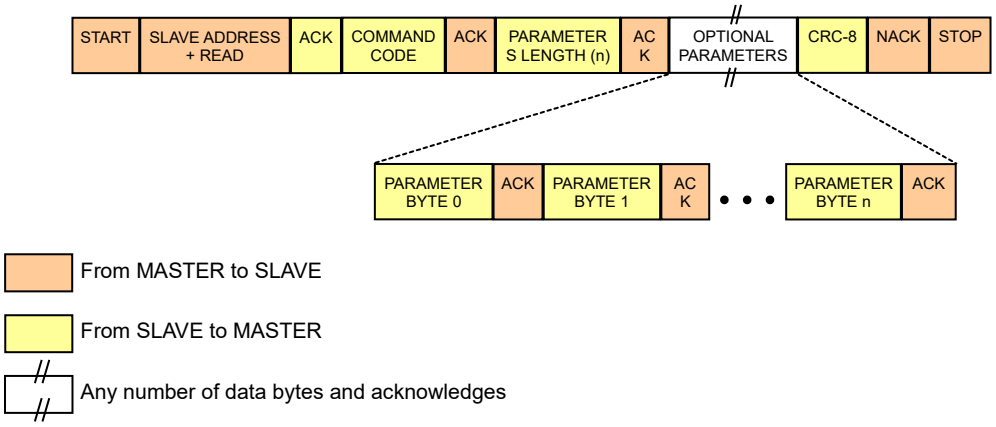

Figure 9 – Typical successful read (slave to master)

8.3 Receive an error from device

If the previous command returns an error, it can be optionally read and detect by the master. A read sequence for a command returning an error consists in the following elements:

1. A *start* condition: it consists of a falling edge on SDA while SCL is high.
2. The *address byte*, i.e. 7 bits corresponding to the device address and the R/W bit set as “read” (the R/W bit is set to logic 1 to indicate a “read” operation and cleared to logic 0 to indicate a “write” operation).
3. A *command code* plus the value 0x80.
4. The *error number*: see Section 10 for a list of error codes.
5. *CRC-8*.
6. A *stop* condition: it consists of a rising edge on SDA while SCL is high.

The master must replies to each received byte with an “ACK” as a confirmation. An ACK consists of a low level on SDA sampled when SCL is high. Only the last byte must be confirmed with a “NACK”. A NACK consists of a high level on SDA sampled when SCL is high.

Information in this datasheet is believed to be correct but Sercalo reserves the right to change specifications without notice at any time. [100-1207]

This document and its entire content are proprietary and confidential to Sercalo Microtechnology Ltd. Neither this document, nor any part of it, may be disclosed or conveyed to, used by or copied for, any third party without the prior written consent of Sercalo Microtechnology Ltd. All rights reserved. © Sercalo Microtechnology Ltd.

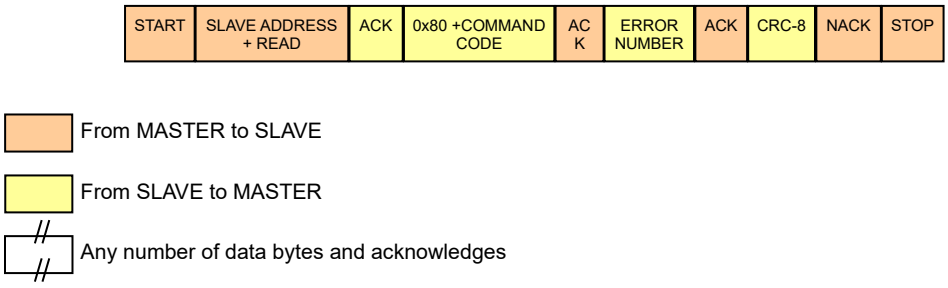

Figure 10 – Device returns an error (slave to master)

8.4 Hold master communication sequence

If the device is addressed during the execution of a command, it pulls down the SCL line in order to force the master into a wait state. By releasing the SCL line, the device indicates that internal processing is terminated and that transmission may be continued. The maximum duration for command execution can vary depending on the command.

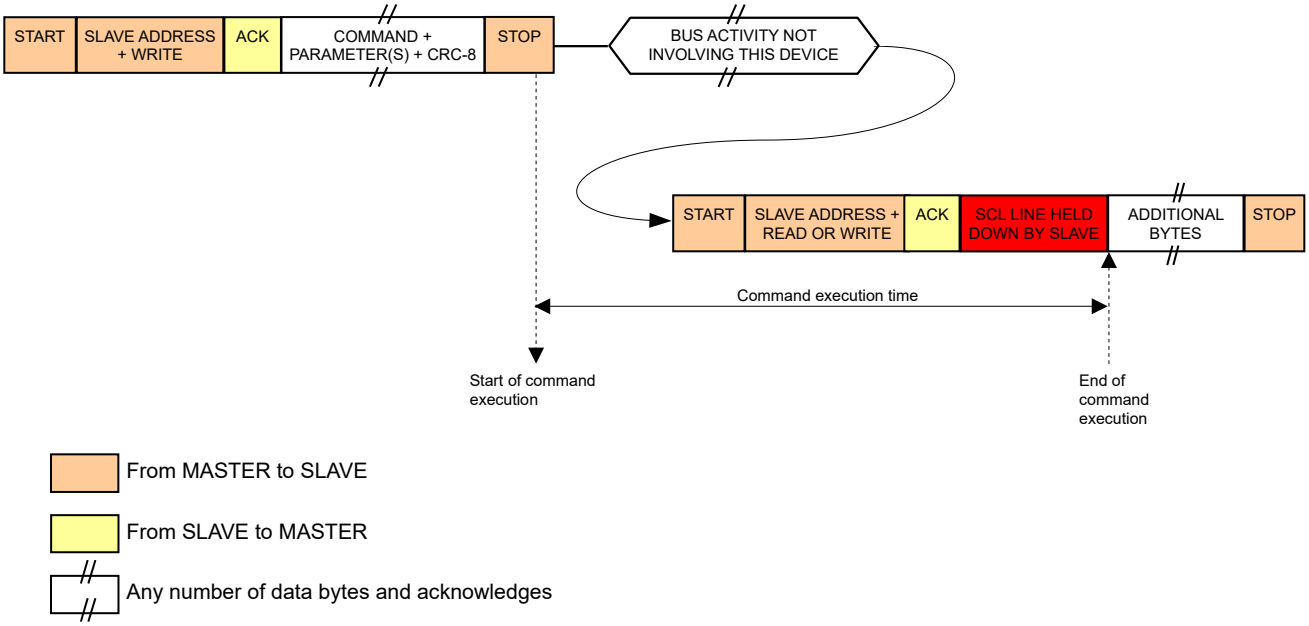

Figure 11 – Communication sequence with SCL line held down until command is executed

8.5 Example of CRC-8 generation

The SMBus/I²C uses a PEC (packet error code) compliant to SMBus specification version 1.1 and 2.0. The polynomial used is x^8+x^2+x+1 i.e. the CRC-8-ATM HEC algorithm, initialized to zero. An example of a C function that performs the calculation is presented below.

```
unsigned char crc8(unsigned char MsgLen, const unsigned char *Msg){
/* Lookup table for CRC codes
// CRC-8, poly = x^8 + x^2 + x^1 + x^0, init = 0 */

static unsigned char crc8_table[256] = {
   0x00, 0x07, 0x0E, 0x09, 0x1C, 0x1B, 0x12, 0x15, 0x38, 0x3F, 0x36, 0x31,
   0x24, 0x23, 0x2A, 0x2D, 0x70, 0x77, 0x7E, 0x79, 0x6C, 0x6B, 0x62, 0x65,
   0x48, 0x4F, 0x46, 0x41, 0x54, 0x53, 0x5A, 0x5D, 0xE0, 0xE7, 0xEE, 0xE9,
```

Information in this datasheet is believed to be correct but Sercalo reserves the right to change specifications without notice at any time. [100-1207]

This document and its entire content are proprietary and confidential to Sercalo Microtechnology Ltd. Neither this document, nor any part of it, may be disclosed or conveyed to, used by or copied for, any third party without the prior written consent of Sercalo Microtechnology Ltd. All rights reserved. © Sercalo Microtechnology Ltd.

```
   0xFC, 0xFB, 0xF2, 0xF5, 0xD8, 0xDF, 0xD6, 0xD1, 0xC4, 0xC3, 0xCA, 0xCD,
   0x90, 0x97, 0x9E, 0x99, 0x8C, 0x8B, 0x82, 0x85, 0xA8, 0xAF, 0xA6, 0xA1,
   0xB4, 0xB3, 0xBA, 0xBD, 0xC7, 0xC0, 0xC9, 0xCE, 0xDB, 0xDC, 0xD5, 0xD2,
   0xFF, 0xF8, 0xF1, 0xF6, 0xE3, 0xE4, 0xED, 0xEA, 0xB7, 0xB0, 0xB9, 0xBE,
   0xAB, 0xAC, 0xA5, 0xA2, 0x8F, 0x88, 0x81, 0x86, 0x93, 0x94, 0x9D, 0x9A,
   0x27, 0x20, 0x29, 0x2E, 0x3B, 0x3C, 0x35, 0x32, 0x1F, 0x18, 0x11, 0x16,
   0x03, 0x04, 0x0D, 0x0A, 0x57, 0x50, 0x59, 0x5E, 0x4B, 0x4C, 0x45, 0x42,
   0x6F, 0x68, 0x61, 0x66, 0x73, 0x74, 0x7D, 0x7A, 0x89, 0x8E, 0x87, 0x80,
   0x95, 0x92, 0x9B, 0x9C, 0xB1, 0xB6, 0xBF, 0xB8, 0xAD, 0xAA, 0xA3, 0xA4,
   0xF9, 0xFE, 0xF7, 0xF0, 0xE5, 0xE2, 0xEB, 0xEC, 0xC1, 0xC6, 0xCF, 0xC8,
   0xDD, 0xDA, 0xD3, 0xD4, 0x69, 0x6E, 0x67, 0x60, 0x75, 0x72, 0x7B, 0x7C,
   0x51, 0x56, 0x5F, 0x58, 0x4D, 0x4A, 0x43, 0x44, 0x19, 0x1E, 0x17, 0x10,
   0x05, 0x02, 0x0B, 0x0C, 0x21, 0x26, 0x2F, 0x28, 0x3D, 0x3A, 0x33, 0x34,
   0x4E, 0x49, 0x40, 0x47, 0x52, 0x55, 0x5C, 0x5B, 0x76, 0x71, 0x78, 0x7F,
   0x6A, 0x6D, 0x64, 0x63, 0x3E, 0x39, 0x30, 0x37, 0x22, 0x25, 0x2C, 0x2B,
   0x06, 0x01, 0x08, 0x0F, 0x1A, 0x1D, 0x14, 0x13, 0xAE, 0xA9, 0xA0, 0xA7,
   0xB2, 0xB5, 0xBC, 0xBB, 0x96, 0x91, 0x98, 0x9F, 0x8A, 0x8D, 0x84, 0x83,
   0xDE, 0xD9, 0xD0, 0xD7, 0xC2, 0xC5, 0xCC, 0xCB, 0xE6, 0xE1, 0xE8, 0xEF,
   0xFA, 0xFD, 0xF4, 0xF3 };

register unsigned char crcVal = 0x00;

while (MsgLen-- > 0)
   crcVal = crc8_table[crcVal ^ *Msg++];

return crcVal;
}
```

Information in this datasheet is believed to be correct but Sercalo reserves the right to change specifications without notice at any time. [100-1207]

This document and its entire content are proprietary and confidential to Sercalo Microtechnology Ltd. Neither this document, nor any part of it, may be disclosed or conveyed to, used by or copied for, any third party without the prior written consent of Sercalo Microtechnology Ltd. All rights reserved. © Sercalo Microtechnology Ltd.

9 Command Reference

The available commands are listed in Table 8 and detailed in the following subsections. Use binary command formatting for SMBus/I²C bus, ASCII command formatting for UART.

Command		Description
Binary	**ASCII**	
0x01	ID	Returns the equipment identification
0x02	RST	Resets the device
0x04	ERM	Returns or changes the error returning mode
0x08	TMP	Returns the temperature of the microcontroller
0x10	UART	Returns or changes the UART baud rate
0x11	PTY	Returns or changes the UART parity
0x20	IIC	Returns or changes the address for SMBus/I²C
0x52	SET	Sets the network configuration
0x59	POS	Returns the network configuration
0x5B	BAND	Returns or changes the optical band
0x5C	DBAND	Returns or changes the default optical band

Table 8 – List of available commands

9.1 ID – Returns the equipment identification

Returns the system identification, which consists of the model, the serial number and the firmware version. The three fields are separated by pipe characters '|' (ASCII 0x7C).

Parameters:			
	PRODUCT	(string)	product model
	S/N	(string)	serial number
	FW_REV	(string)	firmware version

Use with UART and USB:

Syntax: **ID↵**

Reply on success: **ID <PRODUCT>|<S/N>|<FW_REV>**

Example:
```
ID↵
ID SCBU|2019-20-002|1.2
```

Use with SMBus/I²C bus:

Syntax: **ADDR+W,0x01,0x00,CRC8**

Reply on success: **ADDR+R,0x01,STR_LEN,PRODUCT,'|',S/N,'|',FW_REV,CRC8**

Example:
```
(T) FE 01 00 55
(R) FF 01 0A 54 46 7C 4E 2F 41 7C 35 2E 31 16
```

Information in this datasheet is believed to be correct but Sercalo reserves the right to change specifications without notice at any time. [100-1207]

This document and its entire content are proprietary and confidential to Sercalo Microtechnology Ltd. Neither this document, nor any part of it, may be disclosed or conveyed to, used by or copied for, any third party without the prior written consent of Sercalo Microtechnology Ltd. All rights reserved. © Sercalo Microtechnology Ltd.

9.2 RST – Resets the board

Resets the system.

Parameters: none

Use with UART and USB:

Syntax: **RST**↵

Reply on success: **RST**

Example:
RST↵
RST

Use with SMBus/I²C bus:

Syntax: **ADDR+W,0x02,0x00,CRC8**

Reply on success: **ADDR+R,0x02,0x00,CRC8**

Example:
(T) **FE 02 00 6A**
(R) **FF 02 00 01**

9.3 ERM – Returns or changes the error returning mode

If called without parameters, returns 0 if the errors are identified with integer numbers or 1 if the errors are returned in plain text. If **ERR_MODE** is entered, switch to verbose mode if its value is 1, or switch to number mode if the value is 0. This parameter returns to the default value after any reset or power-on.

Parameters: **ERR_MODE** (boolean, 0 or 1) error returning mode

Default: **1**

Use with UART and USB:

Syntax: **ERM [ERR_MODE]**↵

Reply on success: **ERM <ERR_MODE>**

Example: query the current error returning mode:
ERM↵
ERM 0
change the current error returning mode:
ERM 0↵
ERM 0

Use with SMBus/I²C bus:

Query the current error returning mode:

Syntax: **ADDR+W,0x04,0x00,CRC8**

Reply on success: **ADDR+R,0x04,0x01,ERR_MODE,CRC8**

Example:
(T) **FE 04 00 14**
(R) **FF 04 01 00 6F**

Information in this datasheet is believed to be correct but Sercalo reserves the right to change specifications without notice at any time. [100-1207]

This document and its entire content are proprietary and confidential to Sercalo Microtechnology Ltd. Neither this document, nor any part of it, may be disclosed or conveyed to, used by or copied for, any third party without the prior written consent of Sercalo Microtechnology Ltd. All rights reserved. © Sercalo Microtechnology Ltd.

Change the current error returning mode:

Syntax: **ADDR+W,0x04,0x01,ERR_MODE,CRC8**

Reply on success: **ADDR+R,0x04,0x01,ERR_MODE,CRC8**

Examples:

```
(T) FE 04 01 00 79   (set number mode)
(R) FF 04 01 00 6F

(T) FE 04 01 01 7E   (set verbose mode)
(R) FF 04 01 01 68
```

9.4 TMP – Returns the temperature of the microcontroller

Returns the temperature of the microcontroller unit, expressed in Celsius degrees.

Parameters: **TEMP** (char) temperature

Use with UART and USB:

Syntax: **TMP↵**

Reply on success: **TMP <TEMP>**

Example:

```
TMP↵
TMP 38
```

Use with SMBus/I²C bus:

Syntax: **ADDR+W,0x08,0x00,CRC8**

Reply on success: **ADDR+R,0x08,0x01,TEMP,CRC8**

Example:

```
(T) FE 08 00 E8
(R) FF 08 01 1D C6
```

9.5 UART – Changes the baud rate of the UART interface

If called without parameters, returns the baud rate of the UART port. If **UART_BAUD** is entered, changes the baud rate of the UART accordingly to Table 9. This parameter returns to the default value after reset or power-on.

Value	Baud rate
0	9600 (default)
1	19200
2	38400
3	57600
4	115200

Table 9 – List of available baud rates

Parameters: **UART_BAUD** (char, 0 to 4) UART baud rate

Default: **0**

Information in this datasheet is believed to be correct but Sercalo reserves the right to change specifications without notice at any time. [100-1207]

This document and its entire content are proprietary and confidential to Sercalo Microtechnology Ltd. Neither this document, nor any part of it, may be disclosed or conveyed to, used by or copied for, any third party without the prior written consent of Sercalo Microtechnology Ltd. All rights reserved. © Sercalo Microtechnology Ltd.

Use with UART and USB:

Syntax: **UART [UART_BAUD]↵**

Reply on success: **UART <UART_BAUD>**

Example: query the current baud rate:

```
UART↵
UART 3
```

change the baud rate:

```
UART 2↵
UART 2
```

Use with SMBus/I²C bus:

Query the current baud rate:

Syntax: **ADDR+W,0x10,0x00,CRC8**

Reply on success: **ADDR+R,0x10,0x01,UART_BAUD,CRC8**

Example:

```
(T) FE 10 00 17
(R) FF 10 01 00 3F
```

Change the current baud rate:

Syntax: **ADDR+W,0x10,0x01,UART_BAUD,CRC8**

Reply on success: **ADDR+R,0x10,0x01,UART_BAUD,CRC8**

Examples:

```
(T) FE 10 01 00 70   (set 9600 bps)
(R) FF 10 01 00 66

(T) FE 10 01 04 6C   (set 115200 bps)
(R) FF 10 01 04 7A
```

9.6 PTY – Changes the parity setting of the UART interface

If called without parameters, returns the parity setting of the UART port. If **UART_PARITY** is entered, changes the parity setting of the UART accordingly to Table 10. This parameter returns to the default value after reset or power-on.

Value	Parity
0	none (default)
1	even
2	odd
3	mark
4	space

Table 10 – List of available parity settings

Parameters: **UART_PARITY** (char, 0 to 4) UART parity

Default: **0**

Information in this datasheet is believed to be correct but Sercalo reserves the right to change specifications without notice at any time. [100-1207]

This document and its entire content are proprietary and confidential to Sercalo Microtechnology Ltd. Neither this document, nor any part of it, may be disclosed or conveyed to, used by or copied for, any third party without the prior written consent of Sercalo Microtechnology Ltd. All rights reserved. © Sercalo Microtechnology Ltd.

Use with UART and USB:

Syntax: **PTY [UART_PARITY]↵**

Reply on success: **PTY <UART_PARITY>**

Example: query the current parity:
PTY↵
PTY 3
change the parity:
PTY 2↵
PTY 2

Use with SMBus/I²C bus:

Query the current parity:

Syntax: **ADDR+W,0x11,0x00,CRC8**

Reply on success: **ADDR+R,0x11,0x01,UART_PARITY,CRC8**

Example:
```
(T) FE 11 00 02
(R) FF 11 01 00 0D
```

Change the current parity:

Syntax: **ADDR+W,0x11,0x01,UART_PARITY,CRC8**

Reply on success: **ADDR+R,0x11,0x01,UART_PARITY,CRC8**

Examples:
```
(T) FE 11 01 00 1B   (disable parity)
(R) FF 11 01 00 0D

(T) FE 11 01 01 1C   (set even parity)
(R) FF 11 01 01 0A
```

9.7 IIC – Returns or changes the address for SMBus/I²C

If called without parameters, this command returns the current address of the device, as a decimal number. If **IIC_ADDR** is entered, changes the address of the device. This setting is stored in the internal flash memory and is preserved during reset and power-off.

Parameters: **IIC_ADDR** (char, 0 to 255) SMBus/I²C address

Default: **254**

Use with UART and USB:

Syntax: **IIC [IIC_ADDR]↵**

Reply on success: **IIC <IIC_ADDR>**

Example: query the current address:
IIC↵
IIC 254
modify the address:

Information in this datasheet is believed to be correct but Sercalo reserves the right to change specifications without notice at any time. [100-1207]

This document and its entire content are proprietary and confidential to Sercalo Microtechnology Ltd. Neither this document, nor any part of it, may be disclosed or conveyed to, used by or copied for, any third party without the prior written consent of Sercalo Microtechnology Ltd. All rights reserved. © Sercalo Microtechnology Ltd.

```
IIC 2↵
IIC 2
```

Use with SMBus/I²C bus:

Query the current address:

Syntax: `ADDR+W,0x20,0x00,CRC8`

Reply on success: `ADDR+R,0x20,0x01,IIC_ADDR,CRC8`

Example:
```
(T) FE 20 00 EE
(R) FF 20 01 FE 73
```

Modify the address:

Syntax: `ADDR+W,0x20,0x01,IIC_ADDR,CRC8`

Reply on success: `ADDR+R,0x20,0x01,IIC_ADDR,CRC8`

Example:
```
(T) FE 20 01 A0 F8   (new address is 0xA0)
(R) FF 20 01 A0 EE
```

9.8 SET – Sets the network configuration

Sets the optical switch network.

9.8.1 1xN tree switches

For models 1xN, the command must be followed by one parameter representing the desired channel on port B (from 1 to N) to be connected to the single, common channel of port A. If the parameter is 0, the common port is not routed to any port and the optical path is open.

Parameters: `P1` (integer, from 0 to N) channel number

Use with UART and USB:

Syntax: `SET <P1>↵`

Reply on success: `SET <P1>`

Example:
```
SET 5↵
SET 5
```

Use with SMBus/I²C bus:

Syntax: `ADDR+W,0x52,0x01,P1,CRC8`

Reply on success: `ADDR+R,0x52,0x01,P1,CRC8`

Example:
```
(T) FE 52 01 04 3C   (set channel 4)
(R) FF 52 01 04 2A
```

9.8.2 2xN tree switches

For models 2xN, the command must be followed by two parameters representing the desired channels on port B (from 1 to N) to be connected to the two common channels of port

Information in this datasheet is believed to be correct but Sercalo reserves the right to change specifications without notice at any time. [100-1207]

This document and its entire content are proprietary and confidential to Sercalo Microtechnology Ltd. Neither this document, nor any part of it, may be disclosed or conveyed to, used by or copied for, any third party without the prior written consent of Sercalo Microtechnology Ltd. All rights reserved. © Sercalo Microtechnology Ltd.

A. If the parameter is 0, the port is not routed and the optical path is open. Please note that, depending on the optical network, not all the possible permutations are accepted.

Parameters: **P1 P2** (integer, from 0 to N) channel number

Use with UART and USB:

Syntax: **SET <P1> <P2>↵**

Reply on success: **SET <P1> <P2>**

Example:
```
SET 7 30↵
SET 7 30
```

Use with SMBus/I²C bus:

Syntax: **ADDR+W,0x52,0x02,P1,P2,CRC8**

Reply on success: **ADDR+R,0x52,0x02,P1,P2,CRC8**

Example:
```
(T) FE 52 02 04 13 70
(R) FF 52 02 04 13 12
```

9.8.3 8x8 matrices

For models 8x8, the command must be followed by a valid permutation of channel numbers from 0 to 8, that is a list of eight integers where each number (if different from 0) appears only once. If the parameter is 0, the common port is not routed to any port and the optical path is open.

Parameters: **P1...P8** (integer) channel number

Use with UART and USB:

Syntax: **SET <P1> <P2> <P3> <P4> <P5> <P6> <P7> <P8>↵**

Reply on success: **SET <P1> <P2> <P3> <P4> <P5> <P6> <P7> <P8>**

Use with SMBus/I²C bus:

Syntax: **ADDR+W,0x52,0x08,P1,P2,P3,P4,P5,P6,P7,P8,CRC8**

Reply on success: **ADDR+R,0x52,0x08,P1,P2,P3,P4,P5,P6,P7,P8,CRC8**

Example:
```
(T) FE 52 04 04 07 08 06 05 02 01 03 E4
(R) FF 52 04 04 07 08 06 05 02 01 03 FB
```

9.8.4 16x16 matrices

For models 16x16, the command must be followed by two parameters, representing respectively the desired channels on port A (from 1 to N) and B (from 1 to M) to be connected. If the parameter is 0, the common port is not routed to any port and the optical path is open.

Parameters: **PA PB** (integer) channel number

Information in this datasheet is believed to be correct but Sercalo reserves the right to change specifications without notice at any time. [100-1207]

This document and its entire content are proprietary and confidential to Sercalo Microtechnology Ltd. Neither this document, nor any part of it, may be disclosed or conveyed to, used by or copied for, any third party without the prior written consent of Sercalo Microtechnology Ltd. All rights reserved. © Sercalo Microtechnology Ltd.

Use with UART and USB:

Syntax: **SET <PA> <PB>↵**

Reply on success: **SET <PA> <PB>**

Example:
```
SET 4 3↵
SET 4 3
```

Use with SMBus/I²C bus:

Syntax: **ADDR+W,0x52,0x02,PA,PB,CRC8**

Reply on success: **ADDR+R,0x52,0x02,PA,PB,CRC8**

Example:
```
(T) FE 52 02 05 16 7E
(R) FF 52 02 05 16 1C
```

9.8.5 Custom networks

For custom network switches, the status of each submodule can be modified individually. The command accepts two parameters: **SM** is the submodule number and **P** is the desired optical connection.

Parameters:	**SM**	(integer)	submodule number
	P	(integer)	desired connection

Use with UART and USB:

Syntax: **SET <SM> <P>↵**

Reply on success: **SET <SM> <P>**

Example:
```
SET 5 2↵
SET 5 2
```

Use with SMBus/I²C bus:

Syntax: **ADDR+W,0x52,0x02,SM,P,CRC8**

Reply on success: **ADDR+R,0x52,0x02,SM,P,CRC8**

Example:
```
(T) FE 52 02 04 13 70
(R) FF 52 02 04 13 12
```

9.9 POS – Returns the network configuration

Returns the current optical switch network configuration.

9.9.1 1xN tree switches

For models 1xN, the command returns one parameter representing the channel of port B connected to the single, common channel of port A. If the parameter is 0, the common port is not routed to any port and the optical path is open.

Parameters:	**P1**	(integer, from 0 to N)	channel number

Information in this datasheet is believed to be correct but Sercalo reserves the right to change specifications without notice at any time. [100-1207]

This document and its entire content are proprietary and confidential to Sercalo Microtechnology Ltd. Neither this document, nor any part of it, may be disclosed or conveyed to, used by or copied for, any third party without the prior written consent of Sercalo Microtechnology Ltd. All rights reserved. © Sercalo Microtechnology Ltd.

Use with UART and USB:

Syntax: **POS↵**

Reply on success: **POS <P1>**

Example: **POS↵**
POS 3

Use with SMBus/I²C bus:

Syntax: **ADDR+W,0x59,0x00,CRC8**

Reply on success: **ADDR+R,0x59,0x01,P,CRC8**

Example: **(T) FE 59 00 F1**
(R) FF 59 01 04 C6 (current channel is 4)

9.9.2 2xN tree switches

For models 2xN, the command returns two parameters representing the channels of port B connected to the two channels on port A. If the parameter is 0, the common port is not routed to any port and the optical path is open.

Parameters: **P1 P2** (integer, from 0 to N) channel number

Use with UART and USB:

Syntax: **POS↵**

Reply on success: **POS <P1> <P2>**

Example: **POS↵**
POS 20 8

Use with SMBus/I²C bus:

Syntax: **ADDR+W,0x59,0x00,CRC8**

Reply on success: **ADDR+R,0x59,0x02,P1,P2,CRC8**

Example: **(T) FE 59 00 F1**
(R) FF 59 02 04 22 0F

9.9.3 8x8 matrices

For models 8x8, **Pi** is the channel of port B connected to the i-th channel of port A. If the parameter is 0, the common port is not routed to any port and the optical path is open.

Parameters: **P1...P8** (integer) channel number

Use with UART and USB:

Syntax: **POS↵**

Reply on success: **POS <P1> <P2> <P3> <P4> <P5> <P6> <P7> <P8>**

Information in this datasheet is believed to be correct but Sercalo reserves the right to change specifications without notice at any time. [100-1207]

This document and its entire content are proprietary and confidential to Sercalo Microtechnology Ltd. Neither this document, nor any part of it, may be disclosed or conveyed to, used by or copied for, any third party without the prior written consent of Sercalo Microtechnology Ltd. All rights reserved. © Sercalo Microtechnology Ltd.

Example: `POS↵`
`POS 8 1 2 3 4 7 6 5`

Use with SMBus/I²C bus:

Syntax: `ADDR+W,0x59,0x00,CRC8`

Reply on success: `ADDR+R,0x59,0x08,P1,P2,P3,P4,P5,P6,P7,P8,CRC8`

Example:
```
(T) FE 59 00 F1
(R) FF 59 08 04 07 08 06 05 02 01 03 28
```

9.9.4 16x16 matrices

For models 16x16, the command accepts one parameter representing the channel of port A whose position needs to be known. The returned parameter represent the channels of port B connected to the selected channel on port A. If the parameter is 0, the common port is not routed to any port and the optical path is open.

Parameters: `PA PB` (integer) channel number

Use with UART and USB:

Syntax: `POS <PA>↵`

Reply on success: `POS <PA> <PB>`

Example:
```
POS 8↵
POS 8 12
```

Use with SMBus/I²C bus:

Syntax: `ADDR+W,0x59,0x01,PA,CRC8`

Reply on success: `ADDR+R,0x59,0x02,PA,PB,CRC8`

Example:
```
(T) FE 59 00 F1
(R) FF 59 02 01 01 A7
```

9.9.5 Custom networks

For custom network switches, the returned parameters represent the optical connection of each submodule. If the i-th parameter is 0, the optical path of the i-th submodule is open.

Parameters: `P1 … Pn` (integer, from 0 to N) optical connection

Use with UART and USB:

Syntax: `POS↵`

Reply on success: `POS <P1> <P2> … <Pn>`

Example, 4 submodules:
```
POS↵
POS 4 3 1 2
```

Use with SMBus/I²C bus:

4 submodules:

Information in this datasheet is believed to be correct but Sercalo reserves the right to change specifications without notice at any time. [100-1207]

This document and its entire content are proprietary and confidential to Sercalo Microtechnology Ltd. Neither this document, nor any part of it, may be disclosed or conveyed to, used by or copied for, any third party without the prior written consent of Sercalo Microtechnology Ltd. All rights reserved. © Sercalo Microtechnology Ltd.

Syntax: **ADDR+W,0x59,0x00,CRC8**

Reply on success: **ADDR+R,0x59,0x04,P1,P2,P3,P4,CRC8**

Example:
```
(T) FE 59 00 F1
(R) FF 59 01 01 02 12 01 12
```

8 submodules:

Syntax: **ADDR+W,0x59,0x00,CRC8**

Reply on success: **ADDR+R,0x59,0x08,P1,P2,P3,P4,P5,P6,P7,P8,CRC8**

Example:
```
(T) FE 59 00 F1
(R) FF 59 01 01 02 12 01 01 02 12 01 F1
```

9.10 BAND – Returns or sets the optical band

Sets (or, if called without parameters, returns) the optical band in use. The device will optimize its parameters for working with the specified wavelength range. The default value can be changed using command DBAND (see Section 9.11).

Value	Optical band
0	O band (1250 – 1350 nm)
1	C band (1510 – 1580 nm)
2	L band (1580 – 1680 nm)
3	Reserved

Table 11 – List of available optical bands

Parameters: **B** (char, 0 to 4) optical band

Default: **1**

Use with UART and USB:

Syntax: **BAND [B]↵**

Reply on success: **BAND <B>**

Example: query the current optical band:
```
BAND↵
BAND 1
```
modify the optical band:
```
BAND 0↵
BAND 0
```

Use with SMBus/I²C bus:

Query the current optical band:

Syntax: **ADDR+W,0x5B,0x00,CRC8**

Reply on success: **ADDR+R,0x5B,0x01,B,CRC8**

Information in this datasheet is believed to be correct but Sercalo reserves the right to change specifications without notice at any time. [100-1207]

This document and its entire content are proprietary and confidential to Sercalo Microtechnology Ltd. Neither this document, nor any part of it, may be disclosed or conveyed to, used by or copied for, any third party without the prior written consent of Sercalo Microtechnology Ltd. All rights reserved. © Sercalo Microtechnology Ltd.

Example: **(T) FE 5B 00 DB**
(R) FF 5B 01 02 02

Modify the optical band:

Syntax: **ADDR+W,0x5B,0x01,B,CRC8**

Reply on success: **ADDR+R,0x5B,0x01,B,CRC8**

Example: **(T) FE 5B 01 00 1A** (switch optimized for O band)
(R) FF 5B 01 00 0C

9.11 DBAND – Returns or sets the default optical band

Sets (or, if called without parameters, returns) the default optical band, i.e. the band automatically set after reset or power-on. The device will optimize its parameters for working with the specified wavelength range. Available values are listed on Table 11. This setting is stored in the internal flash memory and is preserved during reset and power-off.

Parameters: **B** (char, 0 to 4) default optical band

Default: **1**

Use with UART and USB:

Syntax: **DBAND [B]↵**

Reply on success: **DBAND <B>**

Example: query the current default optical band:
DBAND↵
DBAND 1
modify the default optical band:
DBAND 0↵
DBAND 0

Use with SMBus/I²C bus:

Query the current default optical band:

Syntax: **ADDR+W,0x5C,0x00,CRC8**

Reply on success: **ADDR+R,0x5C,0x01,B,CRC8**

Example: **(T) FE 5C 00 B0**
(R) FF 5C 01 02 14

Modify the default optical band:

Syntax: **ADDR+W,0x5C,0x01,B,CRC8**

Reply on success: **ADDR+R,0x5C,0x01,B,CRC8**

Example: **(T) FE 5C 01 00 0C** (set O band as default)
(R) FF 5C 01 00 1A

Information in this datasheet is believed to be correct but Sercalo reserves the right to change specifications without notice at any time. [100-1207]

This document and its entire content are proprietary and confidential to Sercalo Microtechnology Ltd. Neither this document, nor any part of it, may be disclosed or conveyed to, used by or copied for, any third party without the prior written consent of Sercalo Microtechnology Ltd. All rights reserved. © Sercalo Microtechnology Ltd.

10 Error Codes

The following table gives information about error codes used with sercalo's devices.

Error number	Description
1	syntax error
2	CRC error
3	invalid parameter(s)
4	command unknown
6	buffer overrun
11	communication error

Table 12 – List of error codes

11 Optical Specifications

Please refer to the datasheet for the optical specifications.

12 Electrical Specifications

	Unit	Min	Typ	Max
Supply voltage	V	4.75	5	5.25
Power consumption (single submodule), normal mode	mW			150
Power consumption (total), standby mode	mW		40	
UART speed	baud	9600		115200
SMBus/I^2C bus speed	kbps	100		400
Logic level low	V		0	0.6
Logic level high	V	2.4	5	
Reset inactive voltage[3]	V	2.4	5	
Reset active voltage	V		0	0.9
Reset pulse duration	µs	15		

[3] Through onboard pull-up resistor.

Information in this datasheet is believed to be correct but Sercalo reserves the right to change specifications without notice at any time. [100-1207]

This document and its entire content are proprietary and confidential to Sercalo Microtechnology Ltd. Neither this document, nor any part of it, may be disclosed or conveyed to, used by or copied for, any third party without the prior written consent of Sercalo Microtechnology Ltd. All rights reserved. © Sercalo Microtechnology Ltd.

13 Package Specifications

		Unit	Min	Typ	Max
Operation temperature		°C	-5		70
Storage temperature		°C	-40		85
Operation humidity (non condensing)		% r.h.	0		95
Pigtail length		cm	50		100
Dimensions	Small size	mm	72 x 140 x 16		
	Medium size	mm	100 x 180 x 16		
	Large size	mm	185 x 180 x 16		
ROHS Compliance			2015/863/EU (no exceptions)		

14 Absolute Maximum Ratings

Applicable absolute maximum ratings for the full operating temperature range without causing irreversible damage to the device are listed in Table 13.

	Unit	Min	Max
Maximum optical power[4]	mW		500
Voltage on V_{DD}	V	GND-0.2	5.5
Voltage on any IO pin	V	GND-0.2	5.8
Total current sunk into V_{DD}	mA		300
Current sourced or sunk by any IO pin	mA	-100	100

Table 13 – Absolute maximum ratings

15 Revision History

Version	Date	Modified	Approved	Changes
1.4	25.08.2020	P. Baroni	C. Marxer	Corrected mounting hole description Corrected power consumption

[4]It is recommended to turn off the power source during switch transients if optical power is above 100 mW.

Information in this datasheet is believed to be correct but Sercalo reserves the right to change specifications without notice at any time. [100-1207]

This document and its entire content are proprietary and confidential to Sercalo Microtechnology Ltd. Neither this document, nor any part of it, may be disclosed or conveyed to, used by or copied for, any third party without the prior written consent of Sercalo Microtechnology Ltd. All rights reserved. © Sercalo Microtechnology Ltd.

16 Ordering Information

16.1 SCBU switch

SCBU	16x16	-	9	N	-	05	FP

Switch type
SCBU
wide band
1250-1670 nm

Network
4x4, 8x8, 16x16 (matrix) or from 1x2 up to 2x540 (tree)

Fiber type
9 = SMF28ULTRA
9PM = PANDA
Other fiber types and wavelengths upon request

Fiber sleeve type
B = 250 um bare fibers
R = 8-fibers or 12-fibers ribbon with 250 um acrylate coating
N = 900 mm sleeve

Pigtail length
Expressed in decimeters, e.g.:
05 = 50 cm
100 = 100 cm

Connectors type
none = no connectors
FP = FC-PC
FA = FC-APC narrow key
LP = LC-PC
SP = SC-PC
SA = SC-APC

16.2 Adapter board

AB1-SCBU	Adapter board for SCBU switch

17 Contact Information

sercalo Microtechnology Ltd

Landstrasse 151, 9494 Schaan

Principality of Liechtenstein

Tel.: +423 237 57 97

Fax: +423 237 57 48

http://www.sercalo.com

Email: info@sercalo.com

Information in this datasheet is believed to be correct but Sercalo reserves the right to change specifications without notice at any time. [100-1207]

This document and its entire content are proprietary and confidential to Sercalo Microtechnology Ltd. Neither this document, nor any part of it, may be disclosed or conveyed to, used by or copied for, any third party without the prior written consent of Sercalo Microtechnology Ltd. All rights reserved. © Sercalo Microtechnology Ltd.